"THE MATERIAL HEREIN IS FOR INFORMATION PURPOSES ONLY AND IS SUBJECT TO CHANGE WITHOUT NOTICE. DIGITAL EQUIPMENT CORPORATION ASSUMES NO RESPONSIBILITY FOR ANY ERRORS WHICH MAY APPEAR HEREIN."

FIELD MAINTENANCE PRINT SET

"THIS DRAWING AND SPECIFICATIONS, HEREIN, ARE THE PROPERTY OF DIGITAL EQUIPMENT CORPORATION AND SHALL NOT BE REPRODUCED OR COPIED OR USED IN WHOLE OR IN PART AS THE BASIS FOR THE MANUFACTURE OR SALE OF ITEMS WITHOUT WRITTEN PERMISSION. COPYRIGHT © 1978 , DIGITAL EQUIPMENT CORPORATION."

TABLE OF CONTENTS

B-TC-FP78Ø-Ø-1	FP78Ø FLOATING POINT ACCELERATOR (TC)
B-DD-FP78Ø-Ø	FP78Ø FLOATING POINT ACCELERATOR (DD)
E-UA-FP78Ø-Ø-Ø	FP78Ø FLOATING POINT ACCELERATOR
D-BD-FP78Ø-Ø-2	FP78Ø FLOAT. PT. ACCEL. (BLOCK DIAGRAM)
E-UA-M8285-Ø-Ø	FRACTION NORMALIZER (MODULE)
B-PL-M8285-Ø-Ø	FRACTION NORMALIZER (PARTS LIST)
D-CS-M8285-Ø-1	FRACTION NORMALIZER (SCHEMATIC)
E-UA-M8286-Ø-Ø	FRACTION MULTIPLIER HIGH (MODULE)
K-PL-M8286-Ø-Ø	FRACTION MULTIPLIER HIGH (PARTS LIST)
D-CS-M8286-Ø-1	FRACTION MULTIPLIER HIGH (SCHEMATIC)
E-UA-M8287-Ø-Ø	FRACTION MULTIPLIER LOW (MODULE)
K-PL-M8287-Ø-Ø	FRACTION MULTIPLIER LOW (PARTS LIST)
D-CS-M8287-Ø-1	FRACTION MULTIPLIER LOW (SCHEMATIC)
E-UA-M8288-Ø-Ø	FRACTION ADDER (MODULE)
B-PL-M8288-Ø-Ø	FRACTION ADDER (PARTS LIST)
D-CS-M8288-Ø-1	FRACTION ADDER (SCHEMATIC)
E-UA-M8289-Ø-Ø	FPA CONTROLLER (MODULE)
K-PL-M8289-Ø-Ø	FPA CONTROLLER (PARTS LIST)
D-CS-M8289-Ø-1	FPA CONTROLLER (SCHEMATIC)

UNIT VARIATIONS COVERED BY THIS PRINT SET
FP78Ø-AA
FP78Ø-AB

FP78Ø

Field Maintenance Print Set

Digital Equipment Corporation

PRINT SET ORDER NO.
MPØØ565

REVISIONS	REV.	CHG. NO.	DATE

USED ON OPTION/MODEL	
1178Ø-C	
1178Ø-D	

SHEET I OF 1

DRN. B. BLODGETT	DATE 12 JAN 78	TITLE: FP78Ø FLOATING POINT ACCELERATOR
CHK'D D. Hoag	DATE 16 FEB 78	digital
PROJ. ENG. A. Helwig	DATE 27 FEB 78	
FIELD SERV. Bill Beeman	DATE 27 FEB '78	

SIZE	CODE	NUMBER	REV.
B	TC	FP78Ø-Ø-1	

DIST.

EN-01124-16-N675-(327)

DRB 124

BLANK

"THE MATERIAL HEREIN IS FOR INFORMATION PURFOSES ONLY AND IS SUBJECT TO CHANGE WITHOUT NOTICE. DIGITAL EQUIPMENT CORPORATION ASSUMES NO RESPONSIBILITY FOR ANY ERRORS WHICH MAY APPEAR HEREIN."

DRAWING DIRECTORY

"THIS DRAWING AND SPECIFICATIONS, HEREIN, ARE THE PROPERTY OF DIGITAL EQUIPMENT CORPORATION AND SHALL NOT BE REPRODUCED OR COPIED OR USED IN WHOLE OR IN PART AS THE BASIS FOR THE MANUFACTURE OR SALE OF ITEMS WITHOUT WRITTEN PERMISSION. COPYRIGHT © 1977 DIGITAL EQUIPMENT CORPORATION.

FOR FIELD MAINTENANCE PRINT SET SEE: B-TC-FP78Ø-Ø-1

UNIT VARIATIONS

VAR	TITLE
FP78Ø-AA	FLOATING POINT ACCELERATOR 115V, 6Ø HZ
FP78Ø-AB	FLOATING POINT ACCELERATOR 23ØV, 5Ø HZ

REVISIONS

REV.	CHANGE NO.	CHK

USED ON OPTION/MODEL

11780 - C
11780 - D

SHEET 1 OF 3

DRN. B. BLODGETT	DATE 01 DEC 77	
CHK'D. D. Hoody	DATE 16 FEB 78	
PROJ. ENG. G. Helenius	DATE 27 Feb 78	
PROD. J Rosen	DATE 3/29/78	

TITLE: FP78Ø FLOATING POINT ACCELERATOR

digital

SIZE	CODE	NUMBER	REV
B	DD	FP78Ø-Ø	

DIST.

DRB 106A

"THIS DRAWING AND SPECIFICATIONS, HEREIN, ARE THE PROPERTY OF DIGITAL EQUIPMENT CORPORATION AND SHALL NOT BE REPRODUCED OR COPIED OR USED IN WHOLE OR IN PART AS THE BASIS FOR THE MANUFACTURE OR SALE OF ITEMS WITHOUT WRITTEN PERMISSION.
COPYRIGHT ©77 DIGITAL EQUIPMENT CORPORATION"

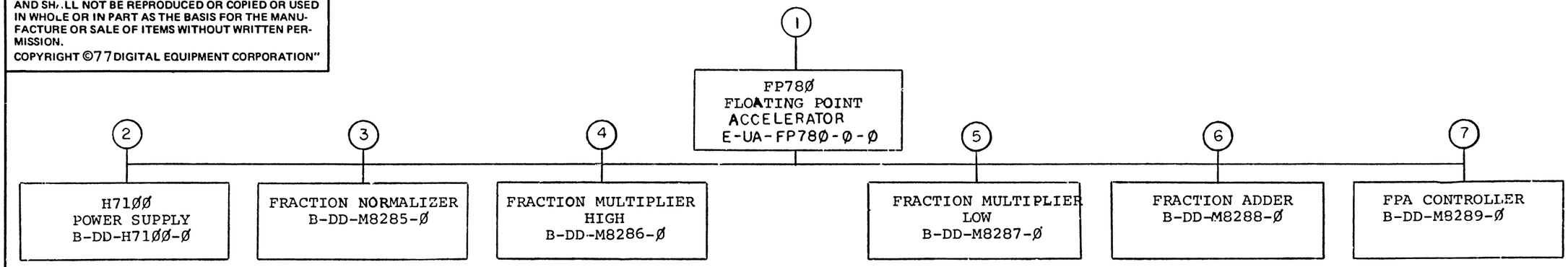

TITLE	SHEET	SIZE	CODE	NUMBER	REV
FP78Ø FLOATING POINT ACCELERATOR	2 OF 3	B	DD	FP78Ø-Ø	

FIND NO.	DRAWING NO.	DESCRIPTION	TYPE
	B-TC-FP78Ø-Ø-1	(TABLE OF CONTENTS) FP78Ø FLOATING PT ACCELERATOR	-
	MPØØ565	(PRINT SET ORDER NO) FP780 FLOATING PT ACCELERATOR	-
1	E-UA-FP78Ø-Ø-Ø	FP78Ø FLOATING POINT ACCELERATOR	E/M
	D-IA-7Ø14249-Ø-Ø	LOGIC POWER CABLE (BLK)	M
	D-IA-7Ø1453Ø-Ø-Ø	LOGIC POWER CABLE (RED)	M
	D-IA-7Ø14213-Ø-Ø	OVER TEMP CABLE	M
2	B-DD-H71ØØ-Ø	H71ØØ POWER SUPPLY	E/M
3	B-DD-M8285-Ø	FRACTION NORMALIZER	E/M
4	B-DD-M8286-Ø	FRACTION MULTIPLIER, HIGH	E/M
5	B-DD-M8287-Ø	FRACTION MULTIPLIER, LOW	E/M
6	B-DD-M8288-Ø	FRACTION ADDER	E/M
7	B-DD-M8289-Ø	FPA CONTROLLER	E/M

TYPE: E ELECTRICAL
M MECHANICAL
E/M ELECTRO/MECHANICAL

digital

TITLE	SHEET	SIZE	CODE	NUMBER	REV
FP78Ø FLOATING POINT ACCELERATOR	3 OF 3	B	DD	FP78Ø-Ø	

DRB 108A

"THIS DRAWING AND SPECIFICATIONS, NOWAL ARE THE PROPERTY OF DIGITAL EQUIPMENT CORPORATION AND SHALL NOT BE REPRODUCED OR COPIED OR USED IN WHOLE OR IN PART AS THE BASIS FOR THE MANUFACTURE OR SALE OF ITEMS WITHOUT WRITTEN PERMISSION.
COPYRIGHT © 1977 DIGITAL EQUIPMENT CORPORATION"

WIRE TABLE

ITEM NO	DESCRIPTION AWG	COLOR	FROM CONN	WITH	TO CONN	WITH	REMARKS
10	8	RED	+5A-A	10-32 NUT	+5V-A	#13 & 14	KA780 TO PS #1
↕	↕	↕	+5A-B	↕	+5V-B	↕	↕
↕	↕	↕	+5A-C	↕	+5V-C	↕	↕
10		RED	+5A-D		+5V-D		
9		BLK	+5A RET-A		+5 RET-A		
↕	↕	↕	+5A RET-B	↕	+5 RET-B	↕	↕
↕	↕	↕	+5A RET-C	↕	+5 RET-C	↕	↕
9	8	BLK	+5A RET-D	10-32 NUT	+5 RET-D	#13 & 14	KA780 TO PS #1
11	—	—	PS1-J4	—	PS2-J5	—	D-IA-7014213-0K
15	—	—	PS1-J3	—	KA780-J17	—	SEE NOTE #2 & 5
REF	—	—	PS1-J5	—	SEE NOTE 7	—	D-IA-7014213-3E

LEGEND

NUMBER	VARIATION
FP780-AA	115V, 60 HZ
FP780-AB	230V, 50 HZ

NOTES:

1. LOGIC JUMPERS (ITEM #12) ARE TO BE INSTALLED ON THE EXISTING CLOCK MODULE (M8232), SUPPLIED WITH THE CPU ASSY (KA780), IN THE LOCATIONS MARKED W1 THRU W14, USING SOLDER.
2. REFER TO 11780 SUB SYSTEM INTERCONN. DWG. # D-IC-11780-0-3 FOR CABLE CONNECTIONS.
3. MOUNTING HARDWARE, (#10-32 NUT & PLASTIC RETAINER) FOR LOGIC POWER CABLES, IS SUPPLIED WITH THE KA780 BACK PLANE ASSY.
4. REMOVE JUMPER WHEN FP780 IS INSTALLED. REFER ALSO TO D-IC-11780-0-3 SHEETS 4 AND 5
5. REMOVE END OF CABLE PLUGGED INTO J13 OF DW780 AND PLUG INTO J3 OF PWR. SUPPLY #1.
6. WHEN INSTALLATION OF WIRE FROM P.S. #1 (+5 RET-D) TO KA780 (+5A RET-D) IS COMPLETE, MAKE SURE THAT WIRE FROM KA780 (+5 RET-D) TO CABINET FRAME REMAINS CONNECTED.
7. REFER TO 11780 SYSTEM INTERCONNECT DIAGRAM #D-IC-11780-0-2 FOR CABLE CONNECTIONS AND D-IC-11780-0-1 FOR SYSTEM POWER DIAGRAM & INFO.

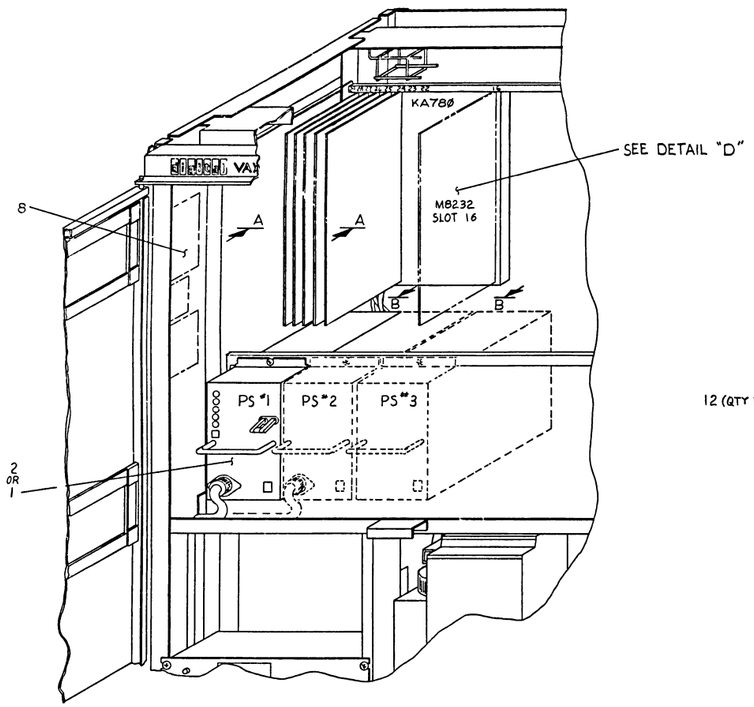

FRONT VIEW OF VAX 11/780

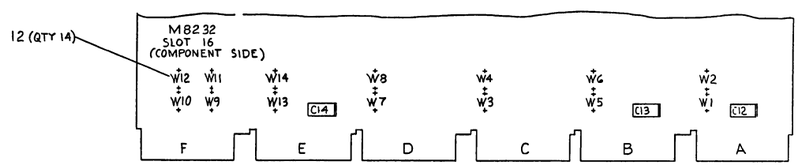

DETAIL "D"
EXISTING CLOCK MODULE (M8232)
SEE NOTE #1

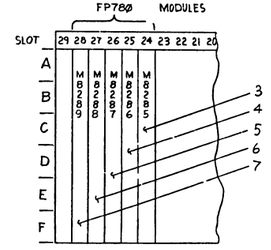

VIEW A-A
MODULE SIDE OF KA780 B.P.
SCALE: NONE

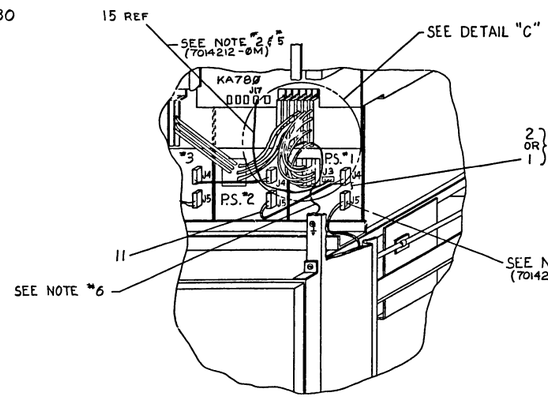

VIEW B-B
REAR VIEW

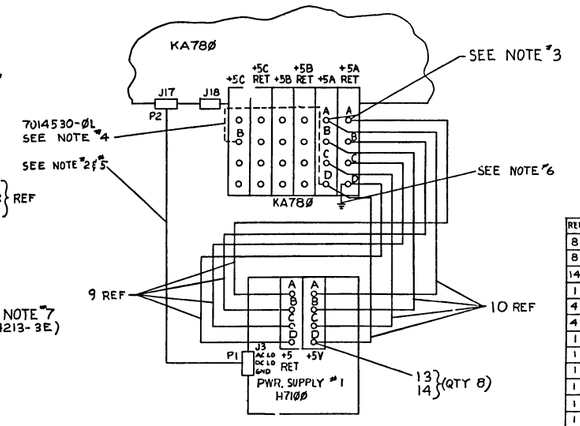

DETAIL "C"
SEE WIRE TABLE

REF	REF	11780 SUB-SYSTEM INTERCONNECT	D-IC-11780-0-3	15
8	8	WASHER, LOCK SPLIT #10	9007906-00	14
8	8	SCR, PH HD PAN #10-32X.50	9004073-01	13
14	14	JUMPER, INSULATED	9009185-00	12
1	1	OVER TEMP. CABLE	D-IA-7014213-0K-0	11
4	4	LOGIC POWER CABLE (RED)	D-IA-7014530-01-0	10
4	4	LOGIC POWER CABLE (BLK)	D-IA-7014249-00-0	9
1	1	STICKER, MODULE UTILIZATION	3615084-00	8
1	1	F.P.A. CONTROLLER	D UA-M8289-0-0	7
1	1	FRACTION ADDER	D UA-M8288-0-0	6
1	1	FRACTION MULTIPLIER, LOW	D-UA-M8287-0-0	5
1	1	FRACTION MULTIPLIER, HIGH	D-UA-M8286-0-0	4
1	1	FRACTION NORMALIZER	D-UA-M8285-0-0	3
—	1	PWR. SUPPLY 230V, 50HZ	E-UA-H7100-B-0	2
—	1	PWR. SUPPLY 115V, 60HZ	E-UA-H7100-A-0	1

ITEM NO	DESCRIPTION UNLESS OTHERWISE SPECIFIED DIMENSIONS ARE IN INCHES	DWG/PART NO.
14	WASHER, FLAT #10	9007906-00
13	SCR, PH HD PAN #10-32X.50	9004073-01
12	JUMPER, INSULATED	9009185-00
11	OVER TEMP. CABLE	D-IA-7014213-0K-0
10	LOGIC POWER CABLE (RED)	D-IA-7014530-01-0
9	LOGIC POWER CABLE (BLK)	D-IA-7014249-00-0
8	STICKER, MODULE UTILIZATION	3615084-00
7	F.P.A. CONTROLLER	D UA-M8289-0-0
6	FRACTION ADDER	D UA-M8288-0-0
5	FRACTION MULTIPLIER, LOW	D-UA-M8287-0-0
4	FRACTION MULTIPLIER, HIGH	D-UA-M8286-0-0
3	FRACTION NORMALIZER	D-UA-M8285-0-0
2	PWR. SUPPLY 230V, 50HZ	E-UA-H7100-B-0
1	PWR. SUPPLY 115V, 60HZ	E-UA-H7100-A-0

ANGLES ±0° 30'
SURFACE QUALITY IN MICROINCHES
BLEND OF ACCURACY: ±.010 (ONE)
NOMINAL DIMENSION RANGE INCHES: 0 TO .12 | .12 TO .24 | .24 TO .48 | .48 TO 1.2 | 1.2 TO 2.4 | 2.4 TO 4.8
MEDIUM: ±.008 | ±.012 | ±.016 | ±.020 | ±.024 | ±.032
PREFERRED: ±.01 | ±.016 | ±.025 | ±.04 | ±.062 | ±.1
QUANTITY & VARIATION

THIRD ANGLE PROJECTION
REMOVE BURRS AND BREAK SHARP CORNERS
DO NOT SCALE DWG
MATERIAL SEE PARTS LIST
FINISH

DRN [illegible] 30 JAN 78
CHK'D [illegible] 27 JAN 78
ENG [illegible] 27 JAN 78
PROJ ENG [illegible] 27 JAN 78
PROD [illegible] 31 JAN 78
NEXT HIGHER ASSY.
B-DD-FP780-0
SCALE NONE
SHEET 1 OF 1

FIRST USED ON: FP780
TITLE: FP780 FLOATING POINT ACCELERATOR
SIZE E | CODE UA | NUMBER FP780-0-0 | REV
DIST

REVISIONS | REV. | CHK. | L. WARE NO.

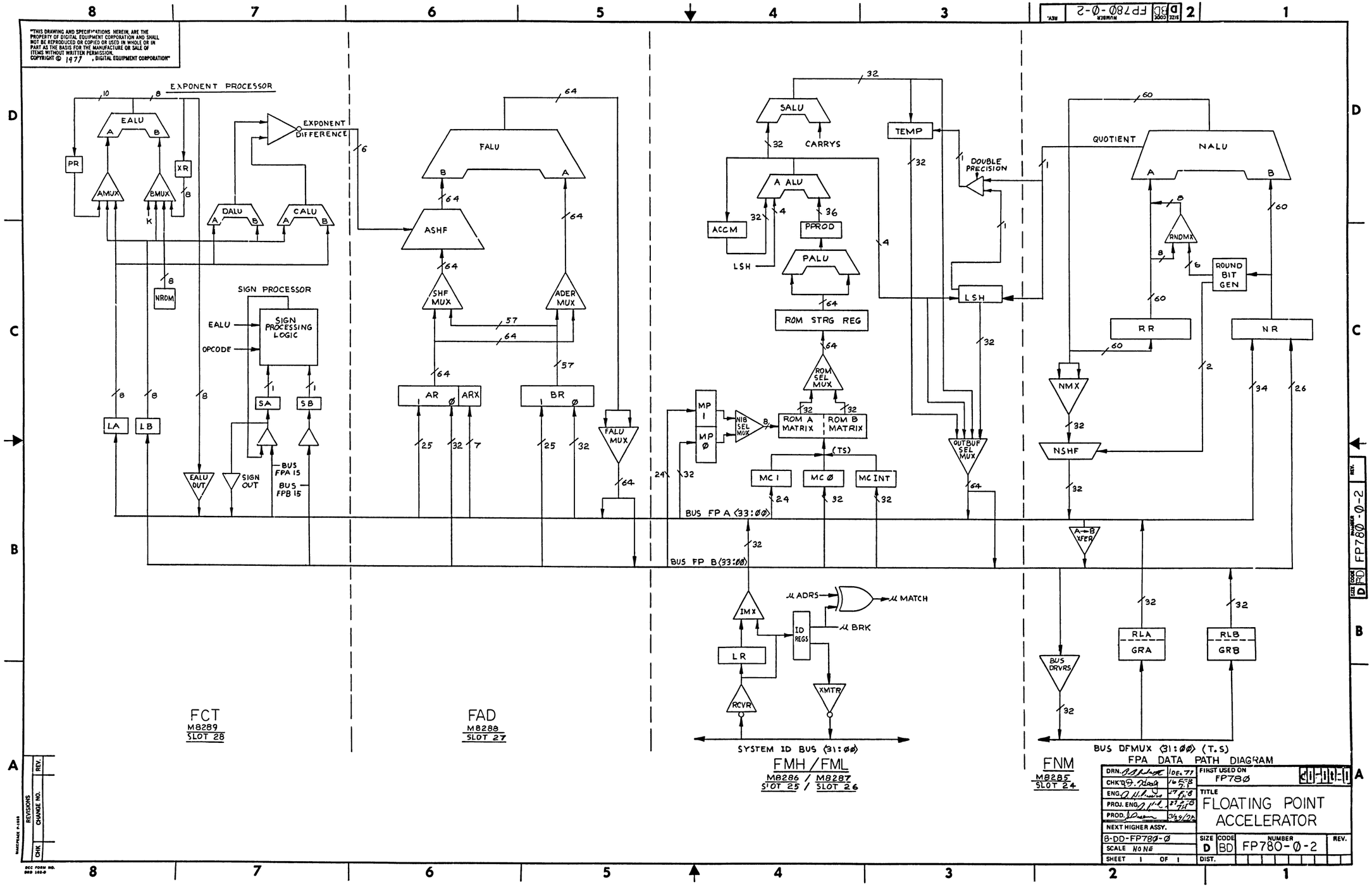

"THIS DRAWING AND SPECIFICATIONS HEREIN, ARE THE PROPERTY OF DIGITAL EQUIPMENT CORPORATION AND SHALL NOT BE REPRODUCED OR COPIED OR USED IN WHOLE OR IN PART AS THE BASIS FOR THE MANUFACTURE OR SALE OF ITEMS WITHOUT WRITTEN PERMISSION.
COPYRIGHT © 1977 , DIGITAL EQUIPMENT CORPORATION"
EXPONENT PROCESSOR
EALU
PR
XR
AMUX
BMUX
DALU
CALU
EXPONENT DIFFERENCE
NROM
SIGN PROCESSOR
EALU
OPCODE
SIGN PROCESSING LOGIC
SA
SB
LA
LB
EALU OUT
SIGN OUT
BUS FPA 15
BUS FPB 15
FALU
ASHF
SHF MUX
ADER MUX
AR
ARX
BR
FALU MUX
SALU
CARRYS
A ALU
ACCM
PPROD
PALU
LSH
ROM STRG REG
ROM SEL MUX
ROM A MATRIX
ROM B MATRIX
NIB SEL MUX
MP 1
MP Ø
(TS)
MC 1
MC Ø
MC INT
TEMP
DOUBLE PRECISION
OUTBUF SEL MUX
QUOTIENT
NALU
RNDMX
ROUND BIT GEN
RR
NR
NMX
NSHF
A→B XFER
BUS FP A (33:ØØ)
BUS FP B (33:ØØ)
IMX
LR
RCVR
ID REGS
XMTR
μ ADRS
μ MATCH
μ BRK
SYSTEM ID BUS (31:ØØ)
BUS DRVRS
RLA
GRA
RLB
GRB
BUS DFMUX (31:ØØ) (T.S)
FCT
M8289
SLOT 28
FAD
M8288
SLOT 27
FMH / FML
M8286 / M8287
SLOT 25 / SLOT 26
FNM
M8285
SLOT 24
FPA DATA PATH DIAGRAM
FIRST USED ON FP78Ø
TITLE
FLOATING POINT ACCELERATOR
NEXT HIGHER ASSY.
B-DD-FP78Ø-Ø
SCALE NONE
SHEET 1 OF 1
SIZE D
CODE BD
NUMBER FP78Ø-Ø-2
REV.
DIST.
REVISIONS
CHANGE NO.
CHK

COMPONENT SIDE VIEW

12.00 IN
304.8 MM
FBS

SIGNATURES	DATE
DRWN.	
CHK. D. [illegible]	
ENG.	
MANUFACTURING	
QUALITY ASSURANCE	

digital

TITLE
FRACTION NORMALIZER

SIZE/CODE A4 | NUMBER M8285-0-0 | REV

SCALE 1:1 | SHT 1 OF 2 | NEXT ASSY

FINISH REQ'D:
FOR SOLDER MASK FACE ONLY

REV	CHANGE NO

NOTES:
1. ETCH CUT SIDE 1 ABOVE FINGER PT 1 AND BELOW 5TH ABOVE PT 1

THIS DRAWING AND SPECIFICATION, WHETHER SEPARATELY OR COLLECTIVELY, IS THE PROPERTY OF DIGITAL EQUIPMENT CORPORATION, MAYNARD, MASSACHUSETTS. IT IS ISSUED IN STRICT CONFIDENCE AND SHALL NOT BE REPRODUCED, COPIED, OR LENT, OR DISCLOSED IN WHOLE OR IN PART, OR USED AS THE BASIS FOR MANUFACTURE OR SALE OF APPARATUS WITHOUT THE WRITTEN PERMISSION OF DIGITAL EQUIPMENT CORPORATION. THIS RESTRICTION DOES NOT LIMIT THE RIGHT TO USE INFORMATION OBTAINED INDEPENDENTLY.

LAYER 1

M8285 5013084A SIDE 1

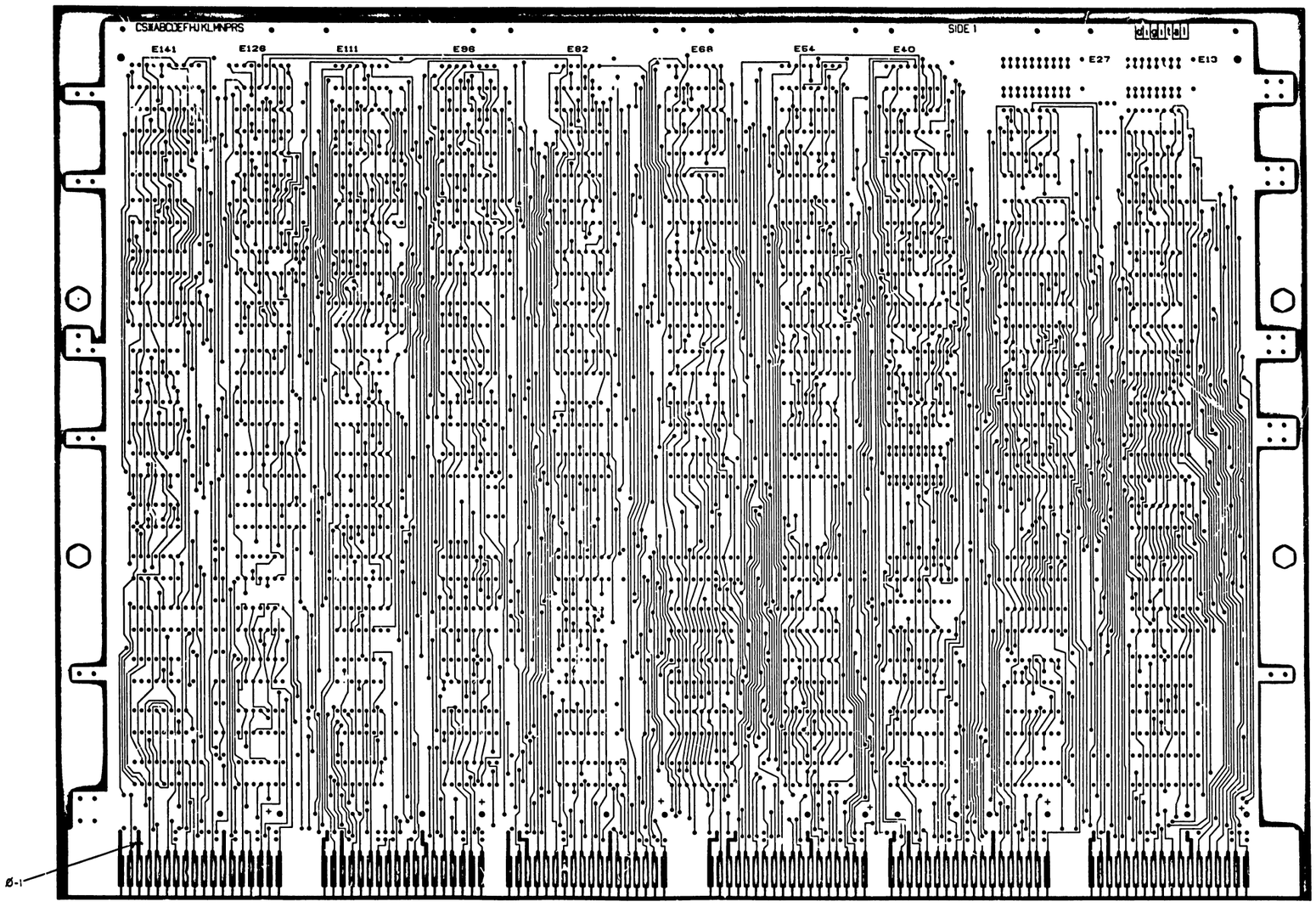

REVISIONS		
DATE	CHANGE NO	REV

TITLE	SIZE	CODE	NUMBER	REV
FRACTION NORMALIZER	E	UA	M8285-Ø-Ø	*
SCALE 2-1	SHEET 2 OF 3	DIST		

THIS DRAWING AND SPECIFICATIONS, EACH WITHIN ARE THE PROPERTY OF DIGITAL EQUIPMENT CORPORATION AND SHALL NOT BE REPRODUCED OR COPIED OR USED IN WHOLE OR IN PART AS THE BASIS FOR THE MANUFACTURE OR SALE OF ITEMS WITHOUT WRITTEN PERMISSION.
COPYRIGHT © 1977 DIGITAL EQUIPMENT CORPORATION

LAYER 4

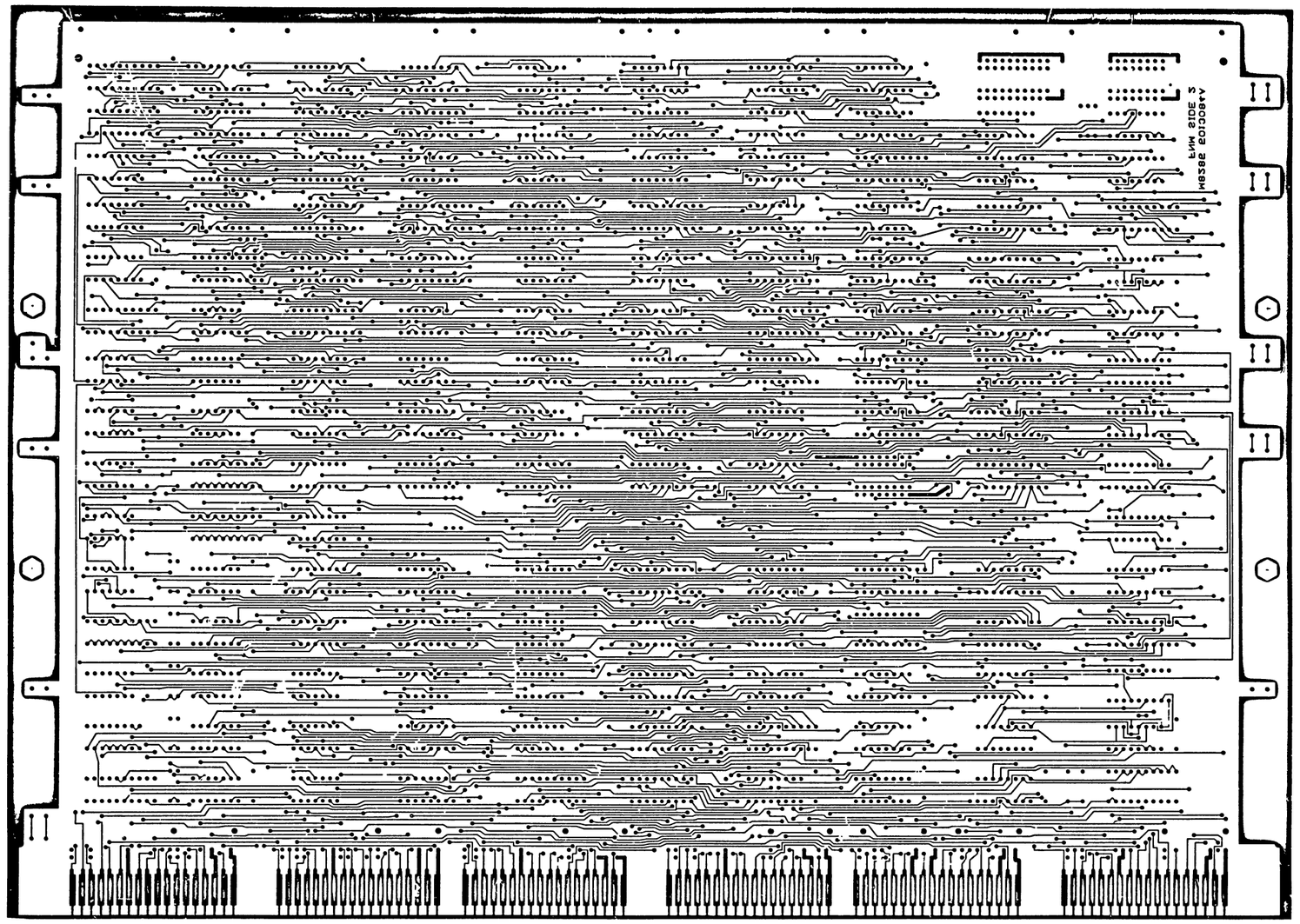

REVISIONS		
CHK	CHANGE NO	REV

TITLE	SIZE	CODE	NUMBER	REV
FRACTION NORMALIZER	E	UA	M8285-0-0	*
SCALE 2-1	SHEET 3 OF 3		DIST	

DIGITAL EQUIPMENT CORPORATION
PARTS LIST

MADE BY / DATE	M. FUNARO 20 JULY 77	CHECKED / DATE	L Giammarino 9-6-77
ENG / DATE	Stan Lacke 4-Oct-77	PROD / DATE	Mike Tenella 9-27-77
SECTION		ISSUED SECTION	

ITEM NO.	DRAWING NO.	PART NO.	DESCRIPTION	QUANTITY / VARIATION M8285-Ø-Ø	REF DESIGNATION
1	D-MD-5013084-0-0	5013084	ETCH BOARD		
2		1910532	I.C. DEC 74SØØ	3	E79,E85,E116
3		1910534	I.C. DEC 74SØ4	4	E75,E97,E99,E133
4		1912389	I.C. DEC 74SØ8	2	E98,E129
5		1910539	I.C. DEC 74S2Ø	1	E112
6		1912746	I.C. DEC 74S37	3	E70,E82,E119
7		1910541	I.C. DEC 74S4Ø	1	E90
8		1911712	I.C. DEC 74S51	3	E72,E91,E120
9		1910542	I.C. DEC 74S64	7	E114,E115,E121,E131,E132,E134,E135
10		1910544	I.C. DEC 74S74	3	E71,E80,E113
11		1910548	I.C. DEC 74S157	11	E52,E53,E62,E63,E64,E76.E77,E78,E81,E95,E105
12		1910549	I.C. DEC 74S158	2	E84,E83
13		1912097	I.C. DEC 74S182	5	E37,E51,E94,E110,E139
14		1910552	I.C. DEC 74S194	32	E8,E9,E11,E12,E39,E40,E41,E43,E44,E46,E54 E66,E67,E68,E86,E87,E88,E89,E96,E100,E101 E102,E103,E104,E107,E111,E123,E124,E125, E126,E137,E138
15		1913493	I.C. DEC 74S241	1	E69
16		1913670	I.C. DEC 74S373	8	E2,E10,E19,E22,E31,E34,E42,E59
17		1913700	I.C. DEC 74S381	15	E36,E38,E48,E49,E50,E65,E92,E93,E106,E108, E109,E122,E136,E140,E141
18		23Ø34B1-ØØ	I.C. 256 X 8 BI POLAR TRI-STATE PROM	1	E127

NOTES:

E.C.O. NO.

"THIS DRAWING AND SPECIFICATIONS, HEREIN, ARE THE PROPERTY OF DIGITAL EQUIPMENT CORPORATION AND SHALL NOT BE REPRODUCED OR COPIED OR USED IN WHOLE OR IN PART AS THE BASIS FOR THE MANUFACTURE OR SALE OF ITEMS WITHOUT WRITTEN PERMISSION. COPYRIGHT © 1977 DIGITAL EQUIPMENT CORPORATION"

TITLE	ASSY NO.	SIZE	CODE	NUMBER	REV.
FRACTION NORMALIZER	E-UA-M8285-Ø-Ø	B	PL	M8285-Ø-Ø	*
	SHEET 1 OF 2	INSERTION PARTS LIST DATA BASE REV A			

DIGITAL EQUIPMENT CORPORATION
PARTS LIST

MADE BY M. FUNARO DATE 20 JULY 77	CHECKED L. Giammarino DATE 9-6-77	SECTION
ENG Stan Lachiay DATE 4-Oct-77	PROD Mike Tuella 9-27-77 DATE	ISSUED SECTION

ITEM NO.	DRAWING NO.	PART NO.	DESCRIPTION	QUANTITY / VARIATION M8285-Ø-Ø	REF DESIGNATION
19		1912693	I.C. DEC 25S1Ø	9	E25,E26,E35,E45,E47,E60,E61, E73,E74
20		1912586	I.C. DEC 85S68	16	E3, E4, E5, E6, E7, E17, E18, E20, E21, E23, E24, E33, E55, E56, E57, E58
21		1913888-00	I.C. DEC DC1Ø2	3	E117, E118, E130
22		1913294	I.C. DEC 93S16	1	E128
23		1911402	I.C. DEC 10105	1	E16
24		1911403	I.C. DEC 10106	1	E15
25		1911415-01	I.C. DEC 10125-1	3	E28,E29,E30
26		1913220-00	I.C. DEC 10216	1	E14
27		1911413	I.C. DEC 10121	1	E1
28		1301972	RESISTOR, 270 OHM, 1/4W, 5%	6	R1, R3, R5, R7, R9, R40
29		1301890	RESISTOR, 560 OHM, 1/4W 5%	6	R2, R4, R6, R8, R10, R41
30		1300295	RESISTOR, 330 OHM, 1/4W, 5%	13	R15 thru R20, R29 thru R35
31		1300247	RESISTOR, 120 OHM, 1/4W, 5%	8	R11, R12, R25, R26, R27, R28, R36, R37
32		1300250	RESISTOR, 150 OHM, 1/4W, 5%	8	R13, R14, R21, R22, R23, R24, R38, R39
33		1012084-01	CAPACITOR, 8 uf, 25 V	7	C3 thru C9
34		1012784	CAPACITOR, .047 uf, 50 V	55	C1, C2, C10 thru C56, C62, C59, C60, C61
35		1210711-02	HANDLE	1	
36		9000024-01	EYELETS	12	
37			SPARE ICS	3	E13, E27, E32

NOTES:

E.C.O. NO.

"THIS DRAWING AND SPECIFICATIONS, HEREIN, ARE THE PROPERTY OF DIGITAL EQUIPMENT CORPORATION AND SHALL NOT BE REPRODUCED OR COPIED OR USED IN WHOLE OR IN PART AS THE BASIS FOR THE MANUFACTURE OR SALE OF ITEMS WITHOUT WRITTEN PERMISSION. COPYRIGHT © 1977 DIGITAL EQUIPMENT CORPORATION"

TITLE	ASSY NO.	SIZE	CODE	NUMBER	REV.
FRACTION NORMALIZER	E-UA-M8285-Ø-Ø	B	PL	M8285-Ø-Ø	*
	SHEET 2 OF 2	INSERTION PARTS LIST DATA BASE REV A			

DRB 125

"THIS DRAWING AND SPECIFICATIONS HEREIN, ARE THE PROPERTY OF DIGITAL EQUIPMENT CORPORATION AND SHALL NOT BE REPRODUCED OR COPIED OR USED IN WHOLE OR IN PART AS THE BASIS FOR THE MANUFACTURE OR SALE OF ITEMS WITHOUT WRITTEN PERMISSION.
COPYRIGHT © 197 , DIGITAL EQUIPMENT CORPORATION"

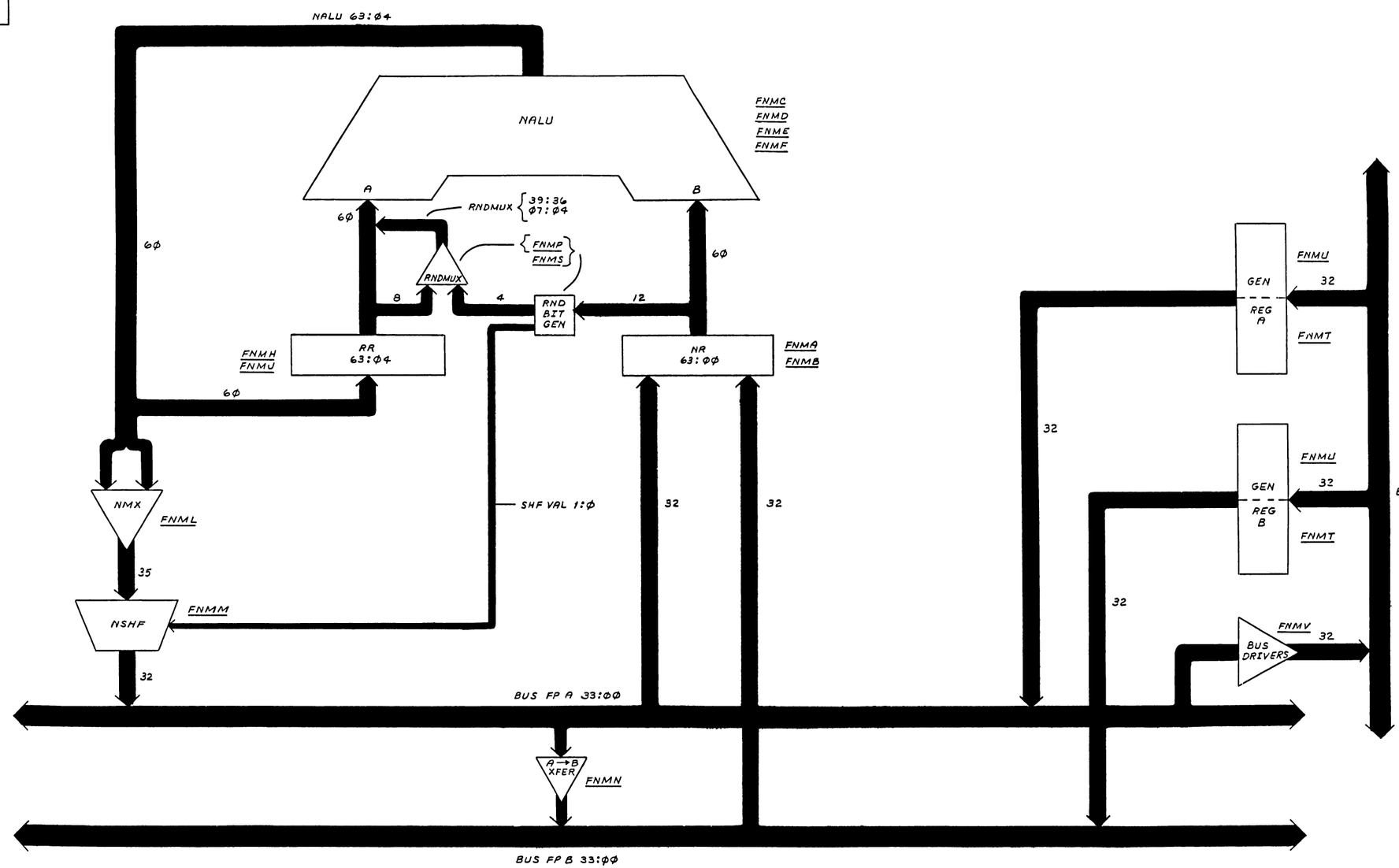

DRN. J. Vincent	8-12-77	FIRST USED ON digital
CHK'D		
ENG. Stan Lacke	10-4-77	TITLE FRACTION NORMALIZER (FNM)
PROJ. ENG. Stan Lacke	10-4-77	
PROD.	10-4-77	
NEXT HIGHER ASSY.		
SCALE —		SIZE D · CODE CS · NUMBER M8285-Ø-1 · REV. A
SHEET 1 OF 21		DIST.

REVISIONS

CHK	CHANGE NO.	REV.
	M8285-00001	A

S. LACKEY

"THIS DRAWING AND SPECIFICATIONS, HEREIN, ARE THE PROPERTY OF DIGITAL EQUIPMENT CORPORATION AND SHALL NOT BE REPRODUCED OR COPIED OR USED IN WHOLE OR IN PART AS THE BASIS FOR THE MANUFACTURE OR SALE OF ITEMS WITHOUT WRITTEN PERMISSION.
COPYRIGHT © 1977 DIGITAL EQUIPMENT CORPORATION"

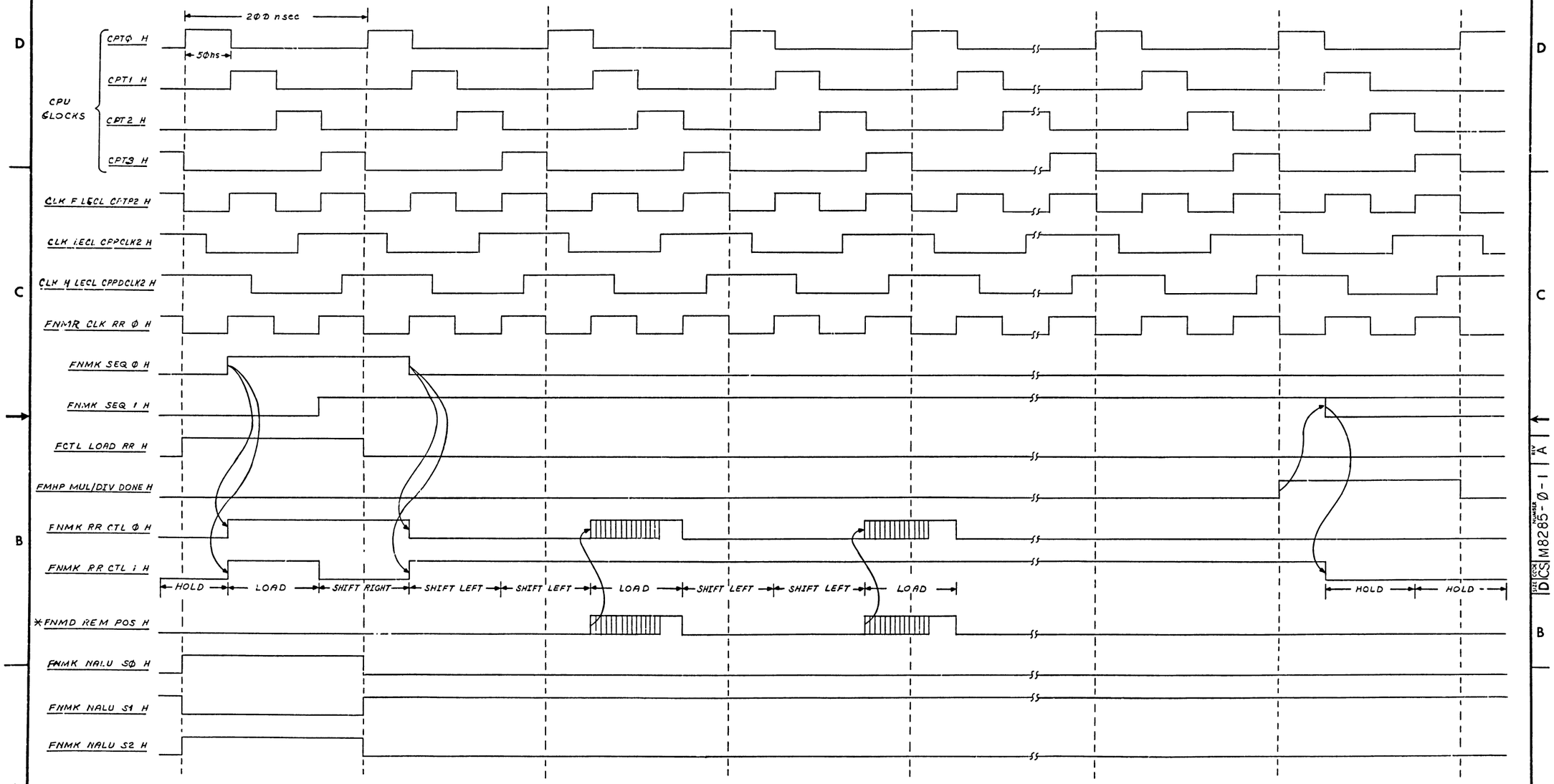

* REMAINDER POSITIVE IS A FUNCTION OF THE DIFFERENCE IN VALUE BETWEEN THE NR AND THE RR (RR MINUS NR).

(DIVIDE SEQUENCER CONTROL) (SLOT 24)

REVISIONS		
CHK	CHANGE NO.	REV.

TITLE	SIZE	CODE	NUMBER	REV.
FRACTION NORMALIZER	D	CS	M8285-Ø-1	A
SCALE —/— SHEET 2 OF 21	DIST.			

M8285-Ø-1 REV A SIZE D CODE CS

"THIS DRAWING AND SPECIFICATIONS, HEREIN, ARE THE PROPERTY OF DIGITAL EQUIPMENT CORPORATION AND SHALL NOT BE REPRODUCED OR COPIED OR USED IN WHOLE OR IN PART AS THE BASIS FOR THE MANUFACTURE OR SALE OF ITEMS WITHOUT WRITTEN PERMISSION
COPYRIGHT © 1977 DIGITAL EQUIPMENT CORPORATION"

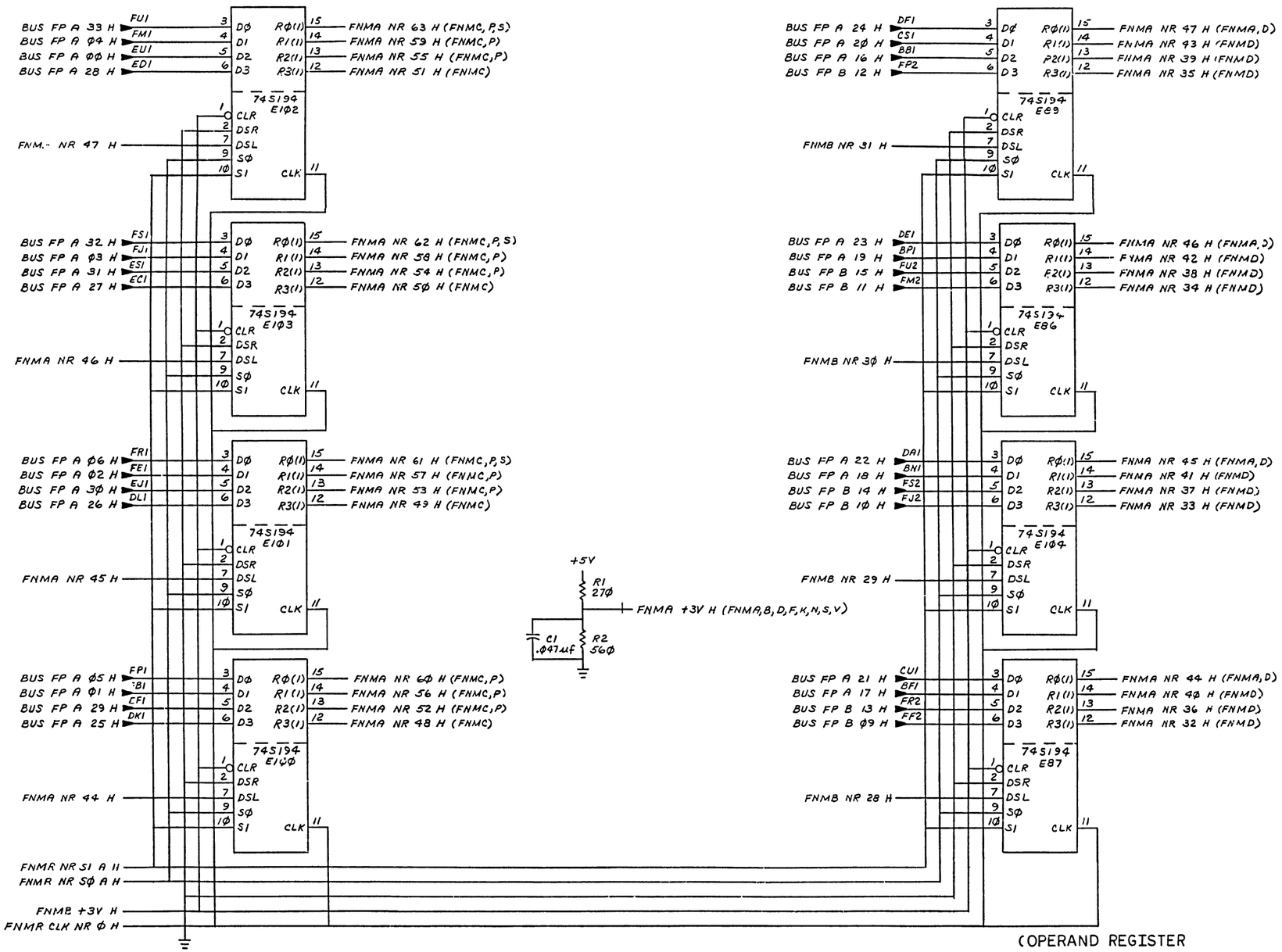

(OPERAND REGISTER (SLOT 24)

REVISIONS		
CHK	CHANGE NO.	REV.

TITLE	SIZE	CODE	NUMBER	REV.
FRACTION NORMALIZER (FNMA)	D	CS	M8285-0-1	A
SCALE —11— SHEET 3 OF 21	DIST.			

"THIS DRAWING AND SPECIFICATIONS, HEREIN, ARE THE PROPERTY OF DIGITAL EQUIPMENT CORPORATION AND SHALL NOT BE REPRODUCED OR COPIED OR USED IN WHOLE OR IN PART AS THE BASIS FOR THE MANUFACTURE OR SALE OF ITEMS WITHOUT WRITTEN PERMISSION.
COPYRIGHT © 1977 DIGITAL EQUIPMENT CORPORATION"

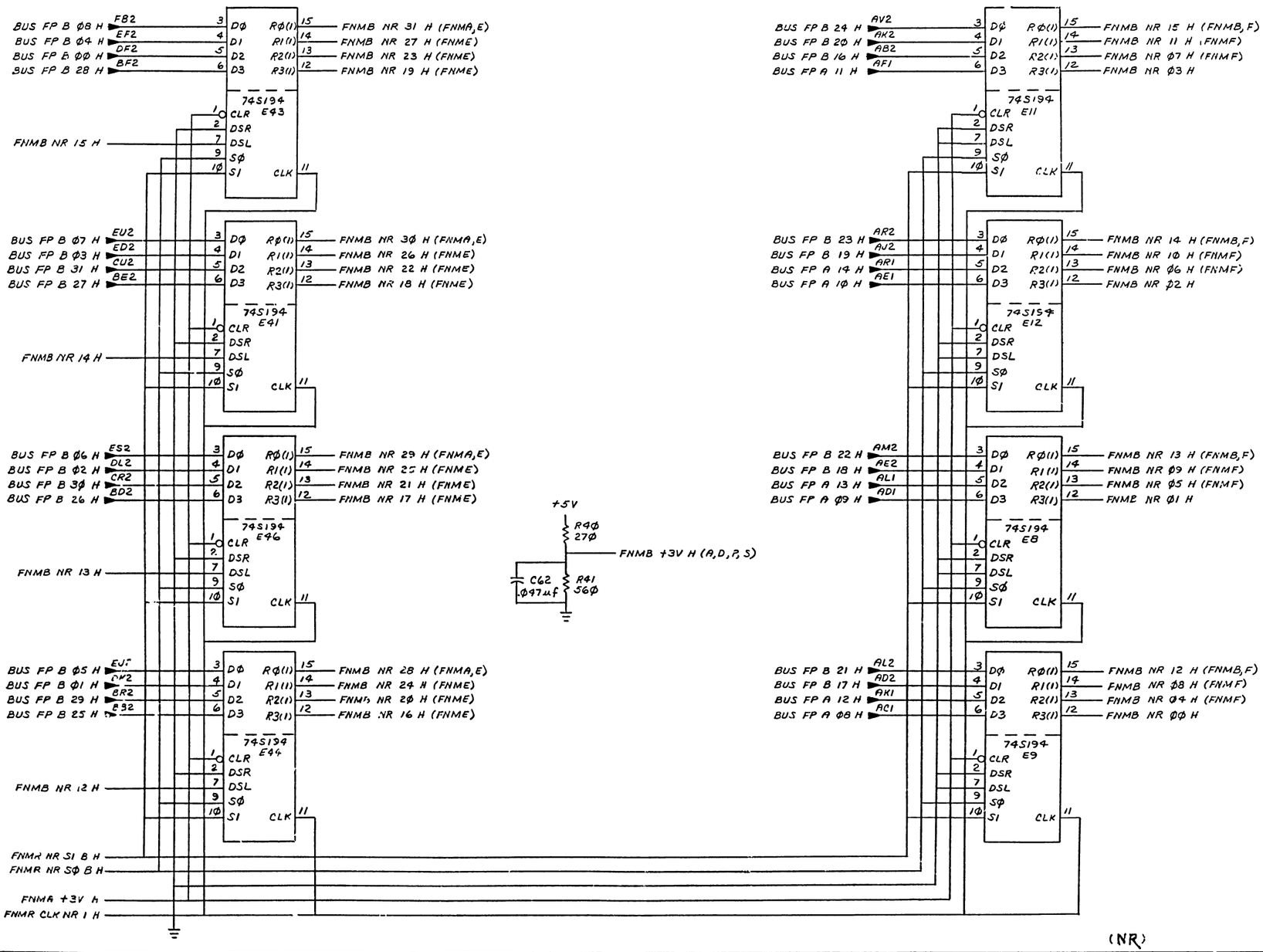

(NR) (SLOT 24)

REVISIONS		
CHK	CHANGE NO.	REV.

TITLE	SIZE	CODE	NUMBER	REV.
FRACTION NORMALIZER (FNMB)	D	CS	M8285-Ø-1	A
SCALE — 11 — SHEET 4 OF 21	DIST.			

DCS M8285-Ø-1 REV A

"THIS DRAWING AND SPECIFICATIONS, HEREIN, ARE THE PROPERTY OF DIGITAL EQUIPMENT CORPORATION AND SHALL NOT BE REPRODUCED OR COPIED OR USED IN WHOLE OR IN PART AS THE BASIS FOR THE MANUFACTURE OR SALE OF ITEMS WITHOUT WRITTEN PERMISSION.
COPYRIGHT © 1977 DIGITAL EQUIPMENT CORPORATION"

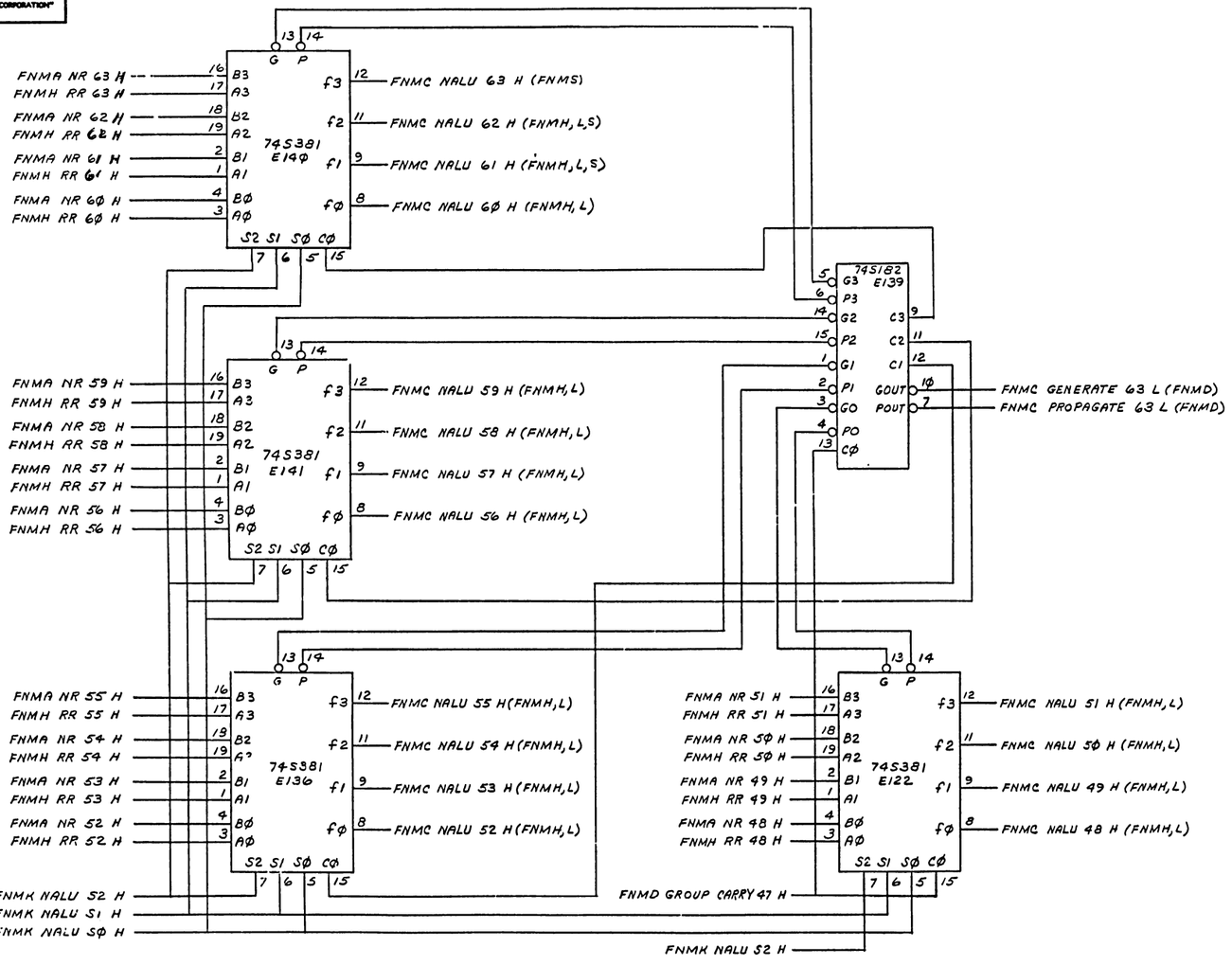

(ROUNDING ADDER) (SLOT 24)

REVISIONS		
CHK	CHANGE NO.	REV.

TITLE	SIZE	CODE	NUMBER	REV.
FRACTION NORMALIZER (FNMC)	D	CS	M8285-0-1	A
SCALE —	SHEET 5 OF 21	DIST.		

DEC FORM 101 0010 1249

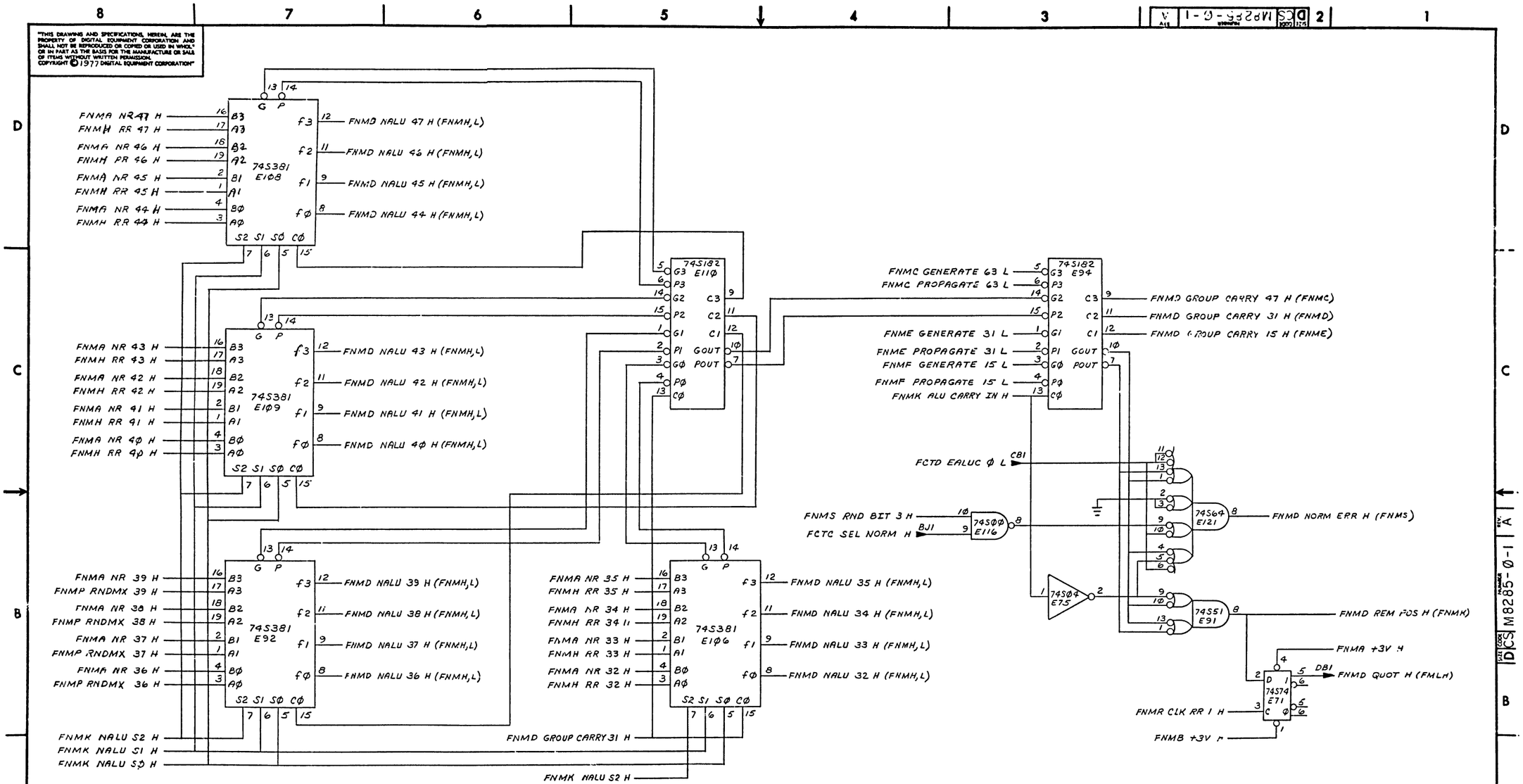

(ROUNDING ADDER) (SLOT 24)

REVISIONS		
CHK	CHANGE NO.	REV.

TITLE	SIZE	CODE	NUMBER	REV.
FRACTION NORMALIZER (FNMD)	D	CS	M8285-0-1	A
SCALE —//—	SHEET 6 OF 21	DIST.		

"THIS DRAWING AND SPECIFICATIONS, HEREIN, ARE THE PROPERTY OF DIGITAL EQUIPMENT CORPORATION AND SHALL NOT BE REPRODUCED OR COPIED OR USED IN WHOLE OR IN PART AS THE BASIS FOR THE MANUFACTURE OR SALE OF ITEMS WITHOUT WRITTEN PERMISSION.
COPYRIGHT ©1977 DIGITAL EQUIPMENT CORPORATION"

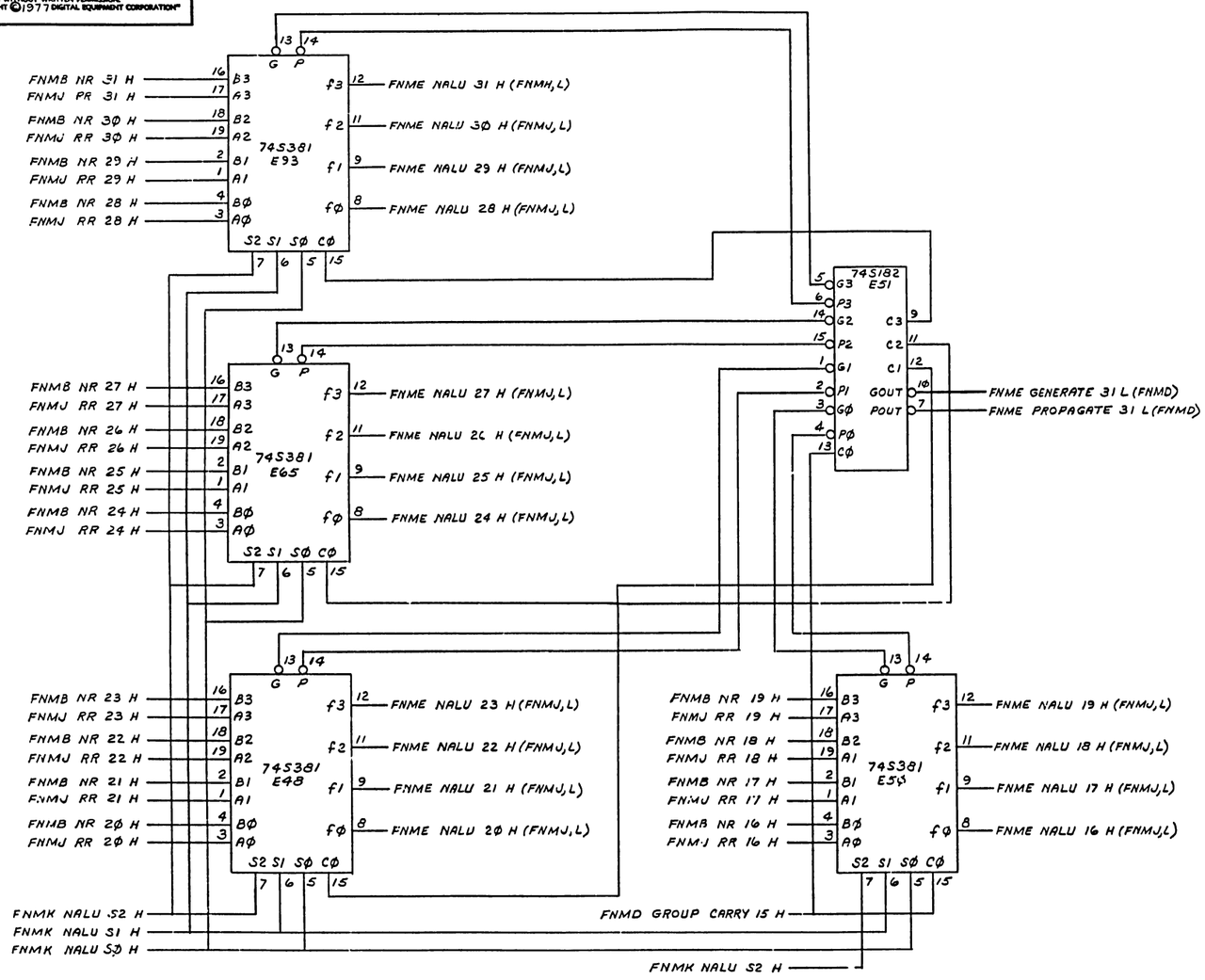

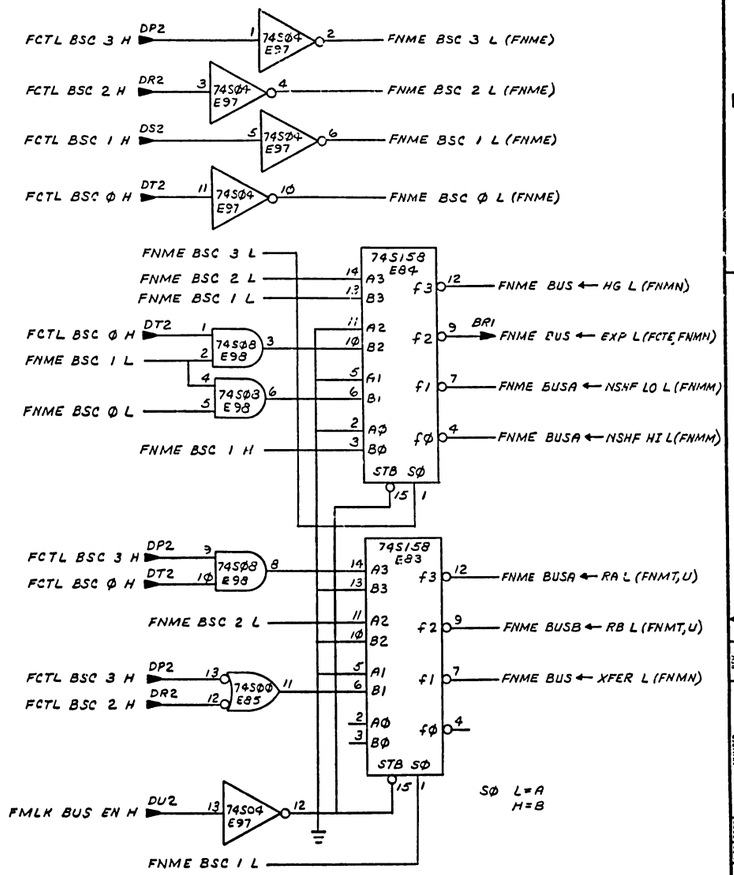

(ROUNDING ADDER) (SLOT 24)

REVISIONS		
CHK	CHANGE NO.	REV.

TITLE	SIZE	CODE	NUMBER	REV.
FRACTION NORMALIZER (FNME)	D	CS	M8285-Ø-1	A
SCALE —/— SHEET 7 OF 21	DIST.			

"THIS DRAWING AND SPECIFICATIONS, HEREIN, ARE THE PROPERTY OF DIGITAL EQUIPMENT CORPORATION AND SHALL NOT BE REPRODUCED OR COPIED OR USED IN WHOLE OR IN PART AS THE BASIS FOR THE MANUFACTURE OR SALE OF ITEMS WITHOUT WRITTEN PERMISSION.
COPYRIGHT © 1977 DIGITAL EQUIPMENT CORPORATION"

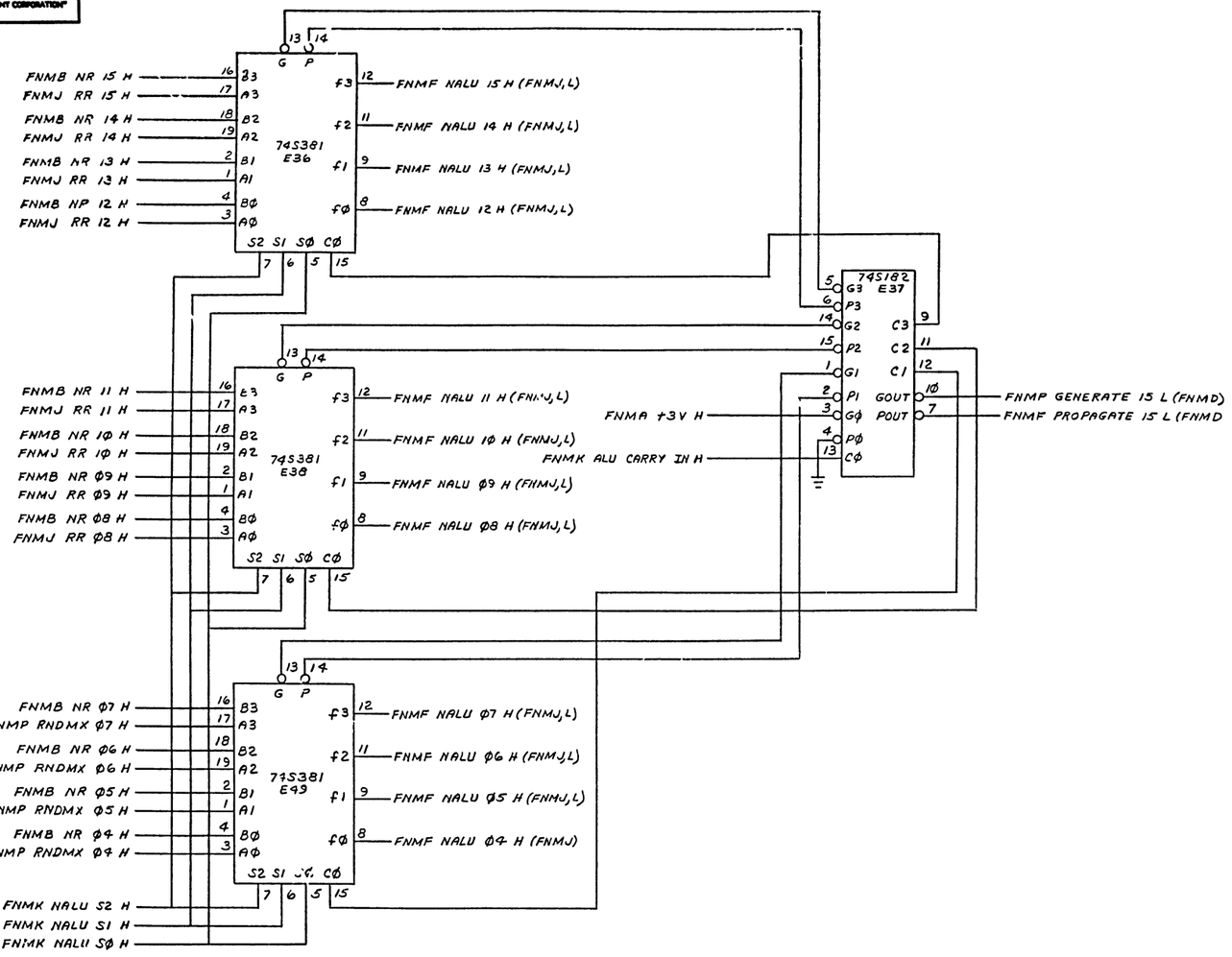

(ROUNDING ADDER) (SLOT 24)

REVISIONS		
CHK	CHANGE NO.	REV.

TITLE	SIZE	CODE	NUMBER	REV.
FRACTION NORMALIZER (FNMF)	D	CS	M8285-0-1	A
SCALE —H— SHEET 8 OF 21	DIST.			

"THIS DRAWING AND SPECIFICATIONS, HEREIN, ARE THE PROPERTY OF DIGITAL EQUIPMENT CORPORATION AND SHALL NOT BE REPRODUCED OR COPIED OR USED IN WHOLE OR IN PART AS THE BASIS FOR THE MANUFACTURE OR SALE OF ITEMS WITHOUT WRITTEN PERMISSION.
COPYRIGHT © 1977 DIGITAL EQUIPMENT CORPORATION"

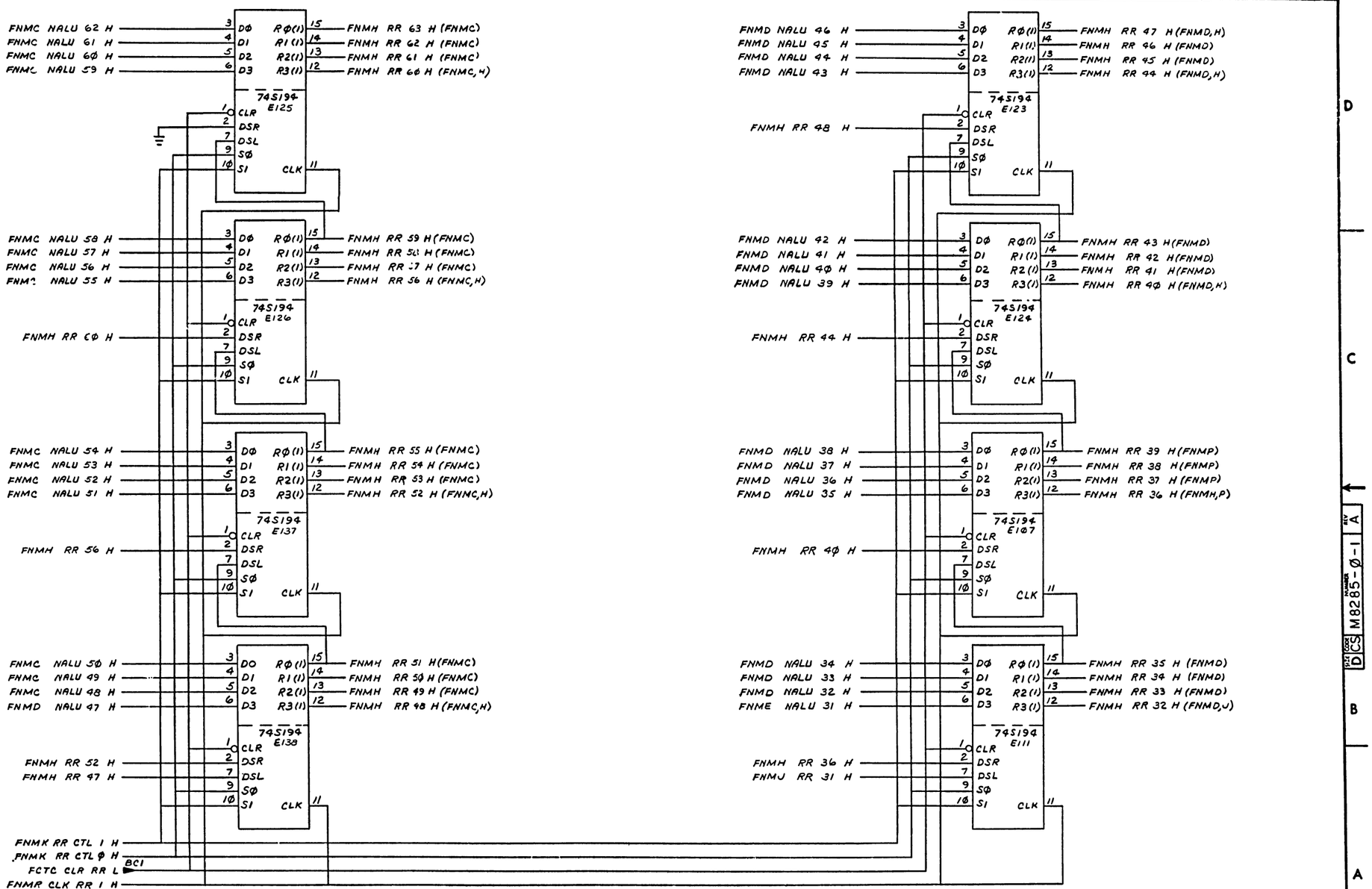

(REMAINDER REG UPPER HALF) (SLOT 24)

REVISIONS		
CHK	CHANGE NO.	REV.

TITLE	SIZE	CODE	NUMBER	REV.
FRACTION NORMALIZER (FNMH)	D	CS	M8285-Ø-1	A
SCALE —/— SHEET 9 OF 21	DIST			

"THIS DRAWING AND SPECIFICATIONS, HEREIN, ARE THE PROPERTY OF DIGITAL EQUIPMENT CORPORATION AND SHALL NOT BE REPRODUCED OR COPIED OR USED IN WHOLE OR IN PART AS THE BASIS FOR THE MANUFACTURE OR SALE OF ITEMS WITHOUT WRITTEN PERMISSION.
COPYRIGHT © 1977 DIGITAL EQUIPMENT CORPORATION"

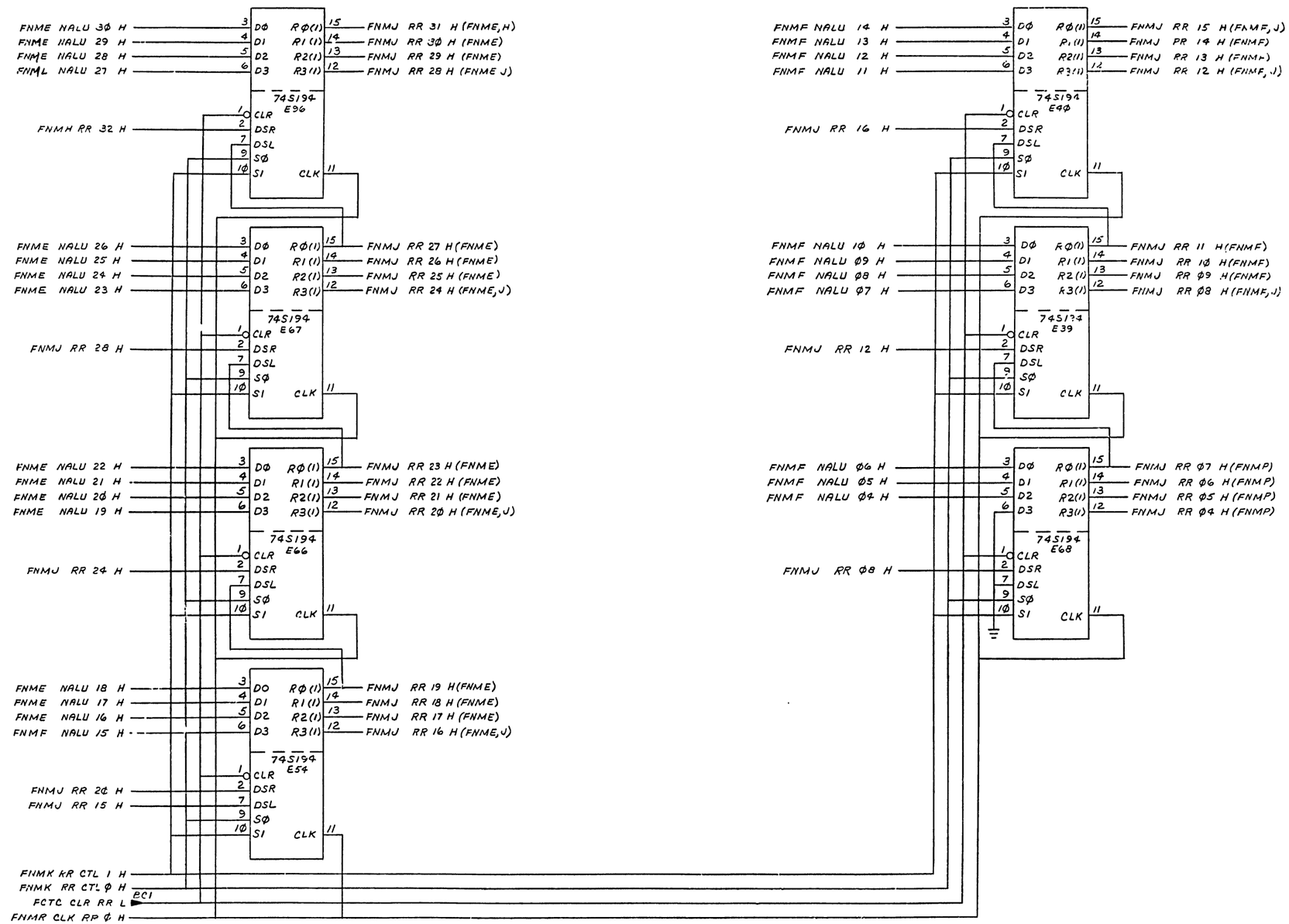

(REMAINDER REG LOWER HALF) (SLOT 24)

REVISIONS		
CHK	CHANGE NO	REV.

TITLE	SIZE	CODE	NUMBER	REV.
FRACTION NORMALIZER (FNMJ)	D	CS	M8285-0-1	A
SCALE — // —	SHEET 10 OF 21		DIST.	

D CS M8285-0-1 A

"THIS DRAWING AND SPECIFICATIONS, HEREIN, ARE THE PROPERTY OF DIGITAL EQUIPMENT CORPORATION AND SHALL NOT BE REPRODUCED OR COPIED OR USED IN WHOLE OR IN PART AS THE BASIS FOR THE MANUFACTURE OR SALE OF ITEMS WITHOUT WRITTEN PERMISSION.
COPYRIGHT © 1977 DIGITAL EQUIPMENT CORPORATION"

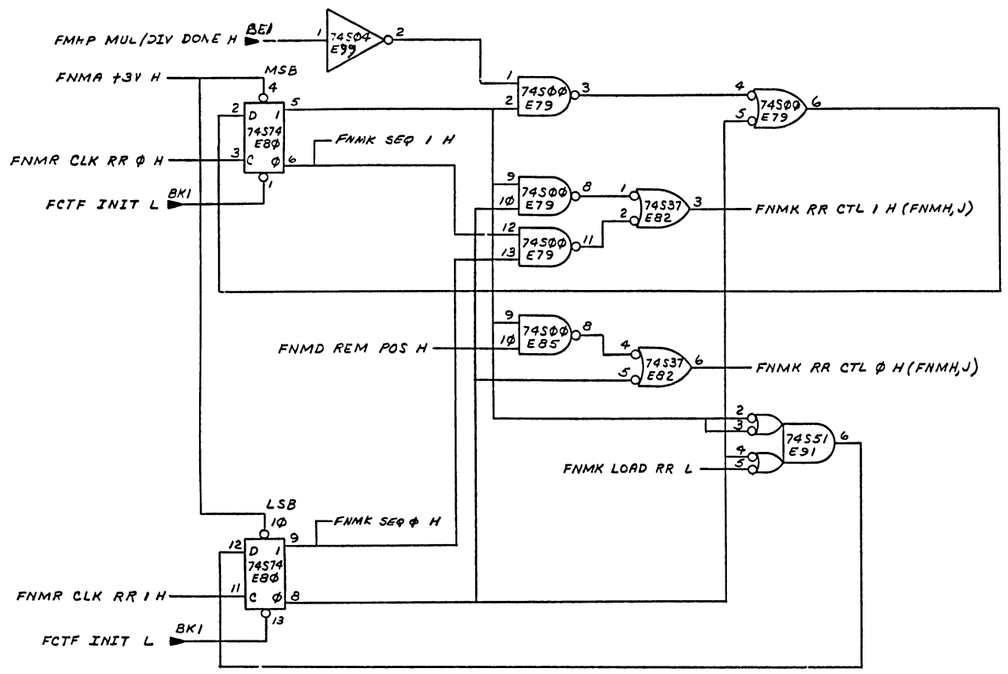

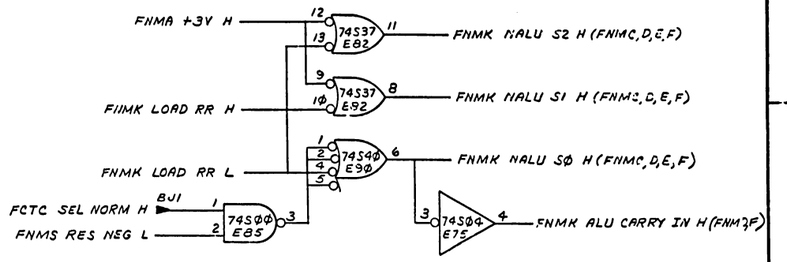

ALU CONTROL				
MICROCODE	ALU	S_2	S_1	$S_Ø$
LOAD RR	A OR B	1	Ø	1
BMX NORM	A ± B	0	1	①
DIVIDE	A − 3	0	1	0

① SELECTED BY HARDWARE

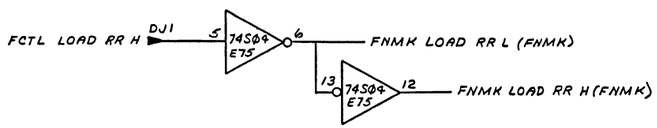

STATE		INPUT	NEXT		FUNC
Ø	Ø	$\overline{LD\ RR}$	Ø	Ø	NOP
Ø	Ø	LD RR	Ø	1	NOP
Ø	1	X	1	1	LOAD
1	1	X	1	Ø	SHR
1	Ø	$\overline{DONE}$	1	Ø	LD/SHL
1	Ø	DONE	Ø	Ø	LD/SHL

(RR & NALU OP CTL) (SLOT 24)

REVISIONS		
CHK	CHANGE NO.	REV.

TITLE	SIZE	CODE	NUMBER	REV.
FRACTION NORMALIZER (FNMK)	D	CS	M8285-Ø-1	A
SCALE —//— SHEET 11 OF 21	DIST.			

M8285-Ø-1 REV A

"THIS DRAWING AND SPECIFICATIONS, HEREIN, ARE THE PROPERTY OF DIGITAL EQUIPMENT CORPORATION AND SHALL NOT BE REPRODUCED OR COPIED OR USED IN WHOLE OR IN PART AS THE BASIS FOR THE MANUFACTURE OR SALE OF ITEMS WITHOUT WRITTEN PERMISSION.
COPYRIGHT © 1977 DIGITAL EQUIPMENT CORPORATION"

74S157 E76
FNMD NALU 35 H
FNMD NALU 38 H
FNMD NALU 37 H
FNMD NALU 36 H
FNML NMX 35 H (FNMM)
FNML NMX 34 H (FNMM)
FNML NMX 33 H (FNMM)
FNML NMX 32 H (FNMM)

74S157 E81
FNME NALU 27 H
FNMC NALU 59 H
FNME NALU 26 H
FNMC NALU 58 H
FNME NALU 25 H
FNMC NALU 57 H
FNME NALU 24 H
FNMC NALU 56 H
FNML NMX 23 H (FNMM)
FNML NMX 22 H (FNMM)
FNML NMX 21 H (FNMM)
FNML NMX 2Ø H (FNMM)

74S157 E52
FNMF NALU 15 H
FNMD NALU 47 H
FNMF NALU 14 H
FNMD NALU 46 H
FNMF NALU 13 H
FNMD NALU 45 H
FNMF NALU 12 H
FNMD NALU 44 H
FNML NMX 11 H (FNMM)
FNML NMX 1Ø H (FNMM)
FNML NMX Ø9 H (FNMM)
FNML NMX Ø8 H (FNMM)

74S157 E77
FNMD NALU 35 H
FNMD NALU 34 H
FNMD NALU 33 H
FNMD NALU 32 H
FNML NMX 31 H (FNMM)
FNML NMX 3Ø H (FNMM)
FNML NMX 29 H (FNMM)
FNML NMX 28 H (FNMM)

74S157 E62
FNME NALU 23 H
FNMC NALU 55 H
FNME NALU 22 H
FNMC NALU 54 H
FNME NALU 21 H
FNMC NALU 53 H
FNME NALU 2Ø H
FNMC NALU 52 H
FNML NMX 19 H (FNMM)
FNML NMX 18 H (FNMM)
FNML NMX 17 H (FNMM)
FNML NMX 16 H (FNMM)

74S157 E53
FNMF NALU 11 H
FNMD NALU 43 H
FNMF NALU 1Ø H
FNMD NALU 42 H
FNMF NALU Ø9 H
FNMD NALU 41 H
FNMF NALU Ø8 H
FNMD NALU 4Ø H
FNML NMX Ø7 H (FNMM)
FNML NMX Ø6 H (FNMM)
FNML NMX Ø5 H (FNMM)
FNML NMX Ø4 H (FNMM)

74S157 E95
FNME NALU 31 H
FNME NALU 3Ø H
FNMC NALU 62 H
FNME NALU 29 H
FNMC NALU 61 H
FNME NALU 28 H
FNMC NALU 6Ø H
FNML NMX 27 H (FNMM)
FNML NMX 26 H (FNMM)
FNML NMX 25 H (FNMM)
FNML NMX 24 H (FNMM)

74S157 E64
FNME NALU 19 H
FNMC NALU 51 H
FNME NALU 18 H
FNMC NALU 5Ø H
FNME NALU 17 H
FNMC NALU 49 H
FNME NALU 16 H
FNMC NALU 48 H
FNML NMX 15 H (FNMM)
FNML NMX 14 H (FNMM)
FNML NMX 13 H (FNMM)
FNML NMX 12 H (FNMM)

74S157 E78
FNMF NALU Ø7 H
FNMD NALU 39 H
FNMF NALU Ø6 H
FNMD NALU 38 H
FNMF NALU Ø5 H
FNMD NALU 37 H
FNML NMX Ø3 H (FNMM)
FNML NMX Ø2 H (FNMM)
FNML NMX Ø1 H (FNMM)

FCTC FORCE ZERO L (CR1) — 74S37 E7Ø
FCTL BSC Ø H (DT2)
FNMP +3V H
74S37 E7Ø

(SLOT 24)

REVISIONS

CHK	CHANGE NO.	REV.

TITLE FRACTION NORMALIZER (FNML)
SIZE D | CODE CS | NUMBER M8285-Ø-1 | REV. A
SCALE —H— | SHEET 12 OF 21 | DIST.

"THIS DRAWING AND SPECIFICATIONS, HEREIN, ARE THE PROPERTY OF DIGITAL EQUIPMENT CORPORATION AND SHALL NOT BE REPRODUCED OR COPIED OR USED IN WHOLE OR IN PART AS THE BASIS FOR THE MANUFACTURE OR SALE OF ITEMS WITHOUT WRITTEN PERMISSION.
COPYRIGHT © 1977 DIGITAL EQUIPMENT CORPORATION"

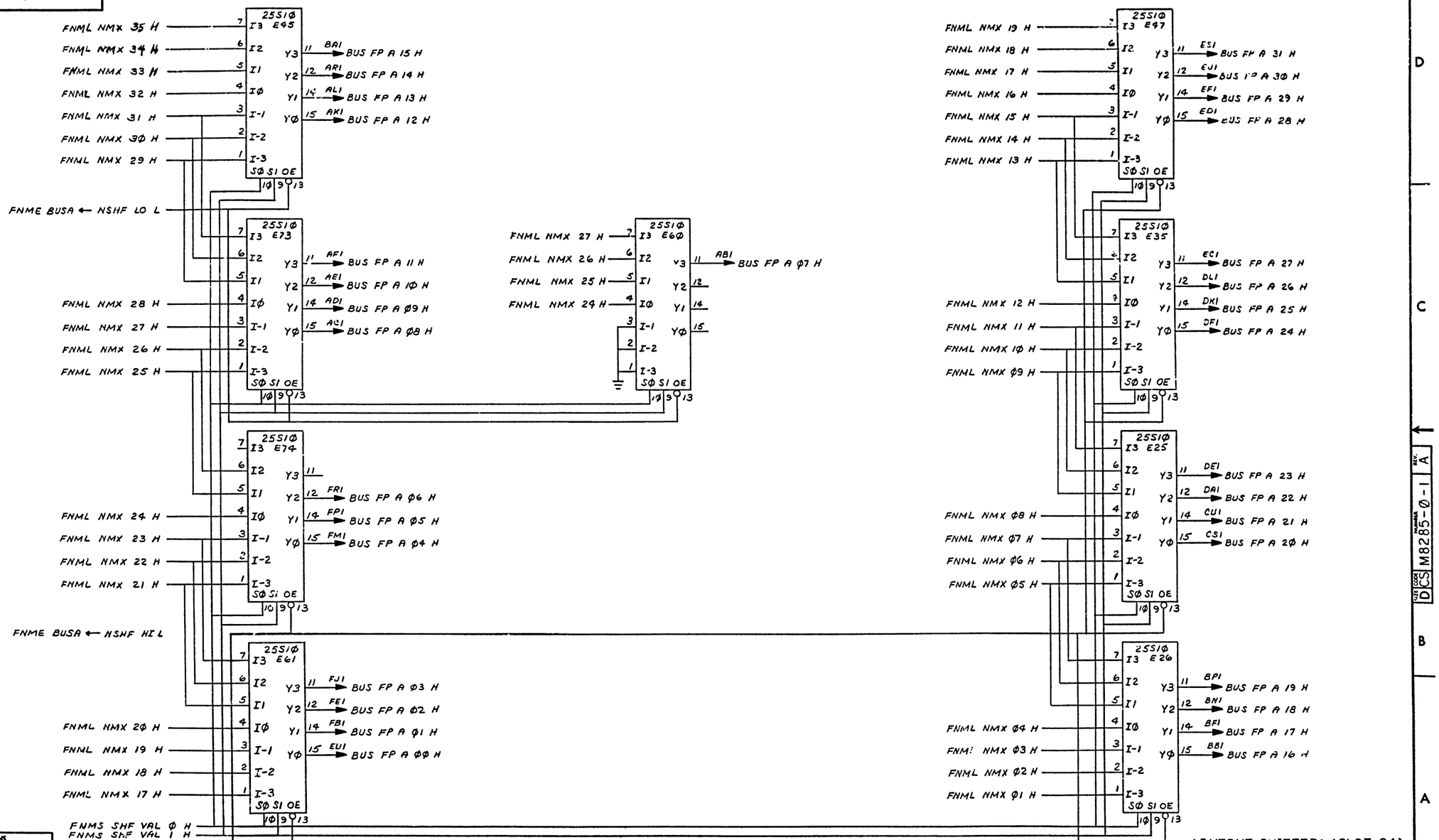

(OUTPUT SHIFTER) (SLOT 24)

REVISIONS		
CHK	CHANGE NO	REV.

TITLE	SIZE	CODE	NUMBER	REV.
FRACTION NORMALIZER (FNMM)	D	CS	M8285-Ø-1	A
SCALE —	SHEET 13 OF 21	DIST.		

DCS M8285-Ø-1 REV. A

"THIS DRAWING AND SPECIFICATIONS, HEREIN, ARE THE PROPERTY OF DIGITAL EQUIPMENT CORPORATION AND SHALL NOT BE REPRODUCED OR COPIED OR USED IN WHOLE OR IN PART AS THE BASIS FOR THE MANUFACTURE OR SALE OF ITEMS WITHOUT WRITTEN PERMISSION.
COPYRIGHT © 1977 DIGITAL EQUIPMENT CORPORATION"

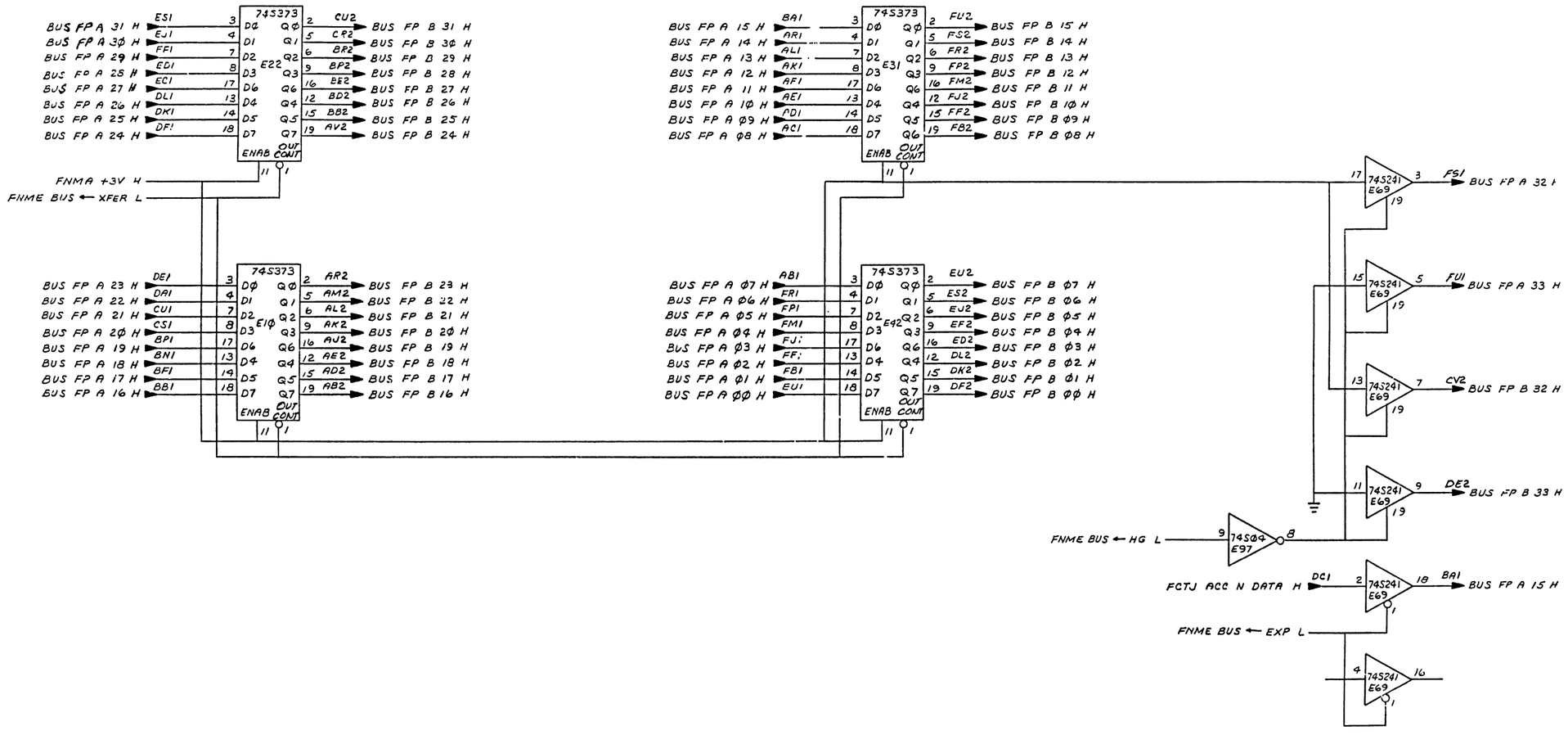

(BUX XFER) (SLOT 24)

REVISIONS		
CHK	CHANGE NO.	REV.

TITLE	SIZE	CODE	NUMBER	REV.
FRACTION NORMALIZER (FNMN)	D	CS	M8285-0-1	A
SCALE —//— SHEET 14 OF 21	DIST.			

"THIS DRAWING AND SPECIFICATIONS, HEREIN, ARE THE PROPERTY OF DIGITAL EQUIPMENT CORPORATION AND SHALL NOT BE REPRODUCED OR COPIED OR USED IN WHOLE OR IN PART AS THE BASIS FOR THE MANUFACTURE OR SALE OF ITEMS WITHOUT WRITTEN PERMISSION.
COPYRIGHT © 1977 DIGITAL EQUIPMENT CORPORATION"

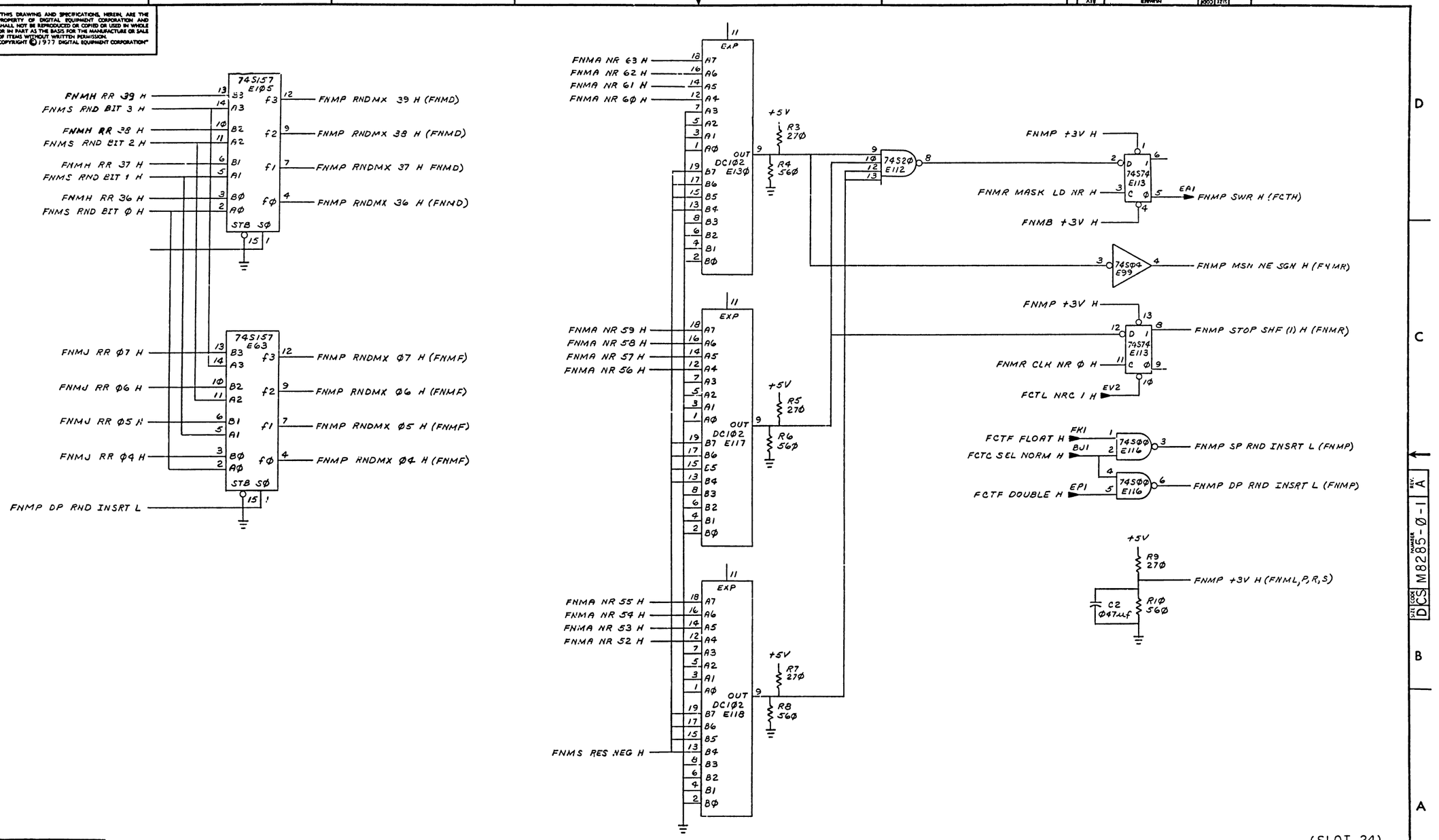

(SLOT 24)

REVISIONS		
CHK	CHANGE NO.	P.C.V.

TITLE	SIZE	CODE	NUMBER	REV.
FRACTION NORMALIZER (FNMP)	D	CS	M8285-Ø-1	A
SCALE	SHEET 15 OF 21	DIST.		

"THIS DRAWING AND SPECIFICATIONS, HEREIN, ARE THE PROPERTY OF DIGITAL EQUIPMENT CORPORATION AND SHALL NOT BE REPRODUCED OR COPIED OR USED IN WHOLE OR IN PART AS THE BASIS FOR THE MANUFACTURE OR SALE OF ITEMS WITHOUT WRITTEN PERMISSION.
COPYRIGHT © ' DIGITAL EQUIPMENT CORPORATION"

-5.2V
R15 33Ø R16 33Ø R17 33Ø R18 33Ø R19 33Ø R2Ø 33Ø

FNMR LECL T175 L
FNMR LECL T175 H
1Ø125 E23
FNMR CLK CPT175 A H (FNMU)
1Ø125 E23
FNMR CLK CPT175 B H (FNMT)

1Ø1Ø5 E16
BL1 FNMR LECL T175 H (FMHN,R,FNMR)
BM1 FNMR LECL T175 L (FMHN,R,FNMR)

FNMR MASK LD NR H (FNMP,R)

-5.2V
R36 12Ø R37 12Ø
CLKC LECL CPTIC3 L BU2
CLKC LECL CPTIC3 H BU1
R38 15Ø R39 15Ø
1Ø125 E29
FNMR CLK CPT5Ø A H (FNMU)
1Ø125 E29
FNMR CLK CPT5Ø B H (FNMT)

-5.2V
R11 12Ø R12 12Ø
CLKF LECL CPTP2 L CD2
CLKF LECL CPTP2 H CD1
R13 15Ø R.4 15Ø
1Ø216 E14

1Ø1Ø6 E15
1Ø1Ø6 E15
1Ø1Ø6 E15

-5.2V
R34 33Ø R35 33Ø
1Ø1Ø5 E16
1Ø125 E3Ø
FNMR CLK NR 1 H (FNMB,S)
1Ø125 E3Ø
FNMR CLK NR Ø H (FNMA,P)

-5.2V
R25 12Ø R26 12Ø R27 12Ø R28 12Ø
CLKF LECL CPPCLK2 L BS2
CLKF LECL CPPCLK2 H BS1
1Ø216 E14

1Ø1Ø5 E16
1Ø125 E3Ø
FNMR CLK RR 1 H (FNMD,H,K)
1Ø125 E3Ø
FNMR CLK RR Ø H (FNMJ,K)

CLKH LECL CPPDCLK2 L CP2
CLKH LECL CPPDCLK2 H CP1
R21 15Ø R22 15Ø R23 15Ø R24 15Ø
1Ø216 E14

-5.2V
R29 33Ø R3Ø 33Ø R31 33Ø R32 33Ø R33 33Ø

FNMP +3V H
FNMR MASK LD NR H
FCTL LOAD RR H DJ1
FNMP MSN NE SGN H
FCTL NRC 1 H EV2
FCTL NRC Ø H FA1
FNMP STOP SHF (1) H
74564 E114
FNMR NR S1 A H (FNMA)

1Ø121 E1
BJ2 FNMR LECL T4 L (FMHN,FMLK)
BK2 FNMR LECL T4 H (FMHN,FMLK)

74564 E115
FNMR NR S1 B H (FNMB,S)

ICLJ ID LEFT ADDR 5 H ER1
74534 E99
74508 E129
74520 E112
ET2 FNMR ACC ADR L (FMLP)
ICLJ ID LEFT ADDR 4 H EM2
ICLJ ID LEFT ADDR 3 H EL2
74504 E99
ICLJ ID LEFT ADDR 2 H EL1
ICLJ ID LEFT ADDR 1 H EE2

FCTL NRG H EV2
FNMP +3V H
FCTL LOAD RR H DJ1
FNMR MASK LD NR H
74551 E72
FNMR NR SØ A H (FNMA)
74551 E72
FNMR NR SØ B H (FNMB)

NRC 1 | Ø
Ø Ø - LOAD NR
Ø 1 - NOT USED
1 Ø - NORM
1 1 - NOP

(CLOCK TRANSLATION) (SLOT 24)

REVISIONS		
CHK	CHANGE NO	REV.

TITLE	SIZE	CODE	NUMBER	REV.
FRACTION NORMALIZER (FNMR)	D	CS	M8285-Ø-1	A
SCALE —/— SHEET 16 OF 21	DIST.			

8 7 6 5 4 3 2 1

"THIS DRAWING AND SPECIFICATIONS, HEREIN, ARE THE PROPERTY OF DIGITAL EQUIPMENT CORPORATION AND SHALL NOT BE REPRODUCED OR COPIED OR USED IN WHOLE OR IN PART AS THE BASIS FOR THE MANUFACTURE OR SALE OF ITEMS WITHOUT WRITTEN PERMISSION.
COPYRIGHT © 1977 DIGITAL EQUIPMENT CORPORATION"

FNMS RES NEG L → 74S37 E119 → CF2 FNMS RES NEG H (FCTJ, FNMP, S)

FNMA NR 63 H → 74S04 E133 → FNMS NR 63 L (FNMS)

FNMA NR 62 H → 74S04 E133

FNMA NR 61 H → 74S04 E133

74S51 E120 → FNMS RND BIT 3 H (FNMD, P)

74S64 E134 → FNMS RND BIT 2 H (FNMP, S) → 74S04 E133

74S64 E132 → FNMS RND BIT 1 H (FNMP, S) → 74S04 E133 → 10

74S64 E131 → FNMS RND BIT 0 H (FNMP, S) → 74S04 E133 → 12

FNMP +3V H

FNMS RES NEG H

FNMS NR 63 L

FCTC SEL NORM H (BJ1)
FNMS RND BIT 1 H → 74S08 E129

FNMS RND BIT 0 H
FNMC NALU 61 H
FCTC SEL NORM H (BJ1)
FNMC NALU 62 H
FNMD NORM ERR H
FNMS RND BIT 2 H
FNMC NALU 63 H
→ 74S64 E135 (EB1) → FNMS EALU CIN L (FCTD)

74S37 E119 → FNMS SHF VAL 1 H (FNMM)

74S37 E119 → FNMS SHF VAL 0 H (FNIAM)

FADM FALU MSB H (EE1)
FCTJ ALU SUB H (FC1)
→ 74S00 E85

74S194 E88
D0 D1 D2 D3 → R0(1) R1(1) R2(1) R3(1) → FNMS RES NEG L (FNMK,S)
CLR DSR DSL S0 S1 CLK
FNMA +3V H
FCTL NRC1 H (EV2) → 74S04 E75
FNMR CLK NR 1 H

23-0348I-01 E127 (256X8 ROM)

FNMS RES NEG L	A7	D7	EB2 → FNMS NORM ROM 7 H (FCTC,D)
	A6	D6	FL1 → FNMS NORM ROM 6 H (FCTC)
	A5	D5	EH2 → FNMS NORM ROM 5 H (FCTC)
	A4	D4	EK2 → FNMS NORM ROM 4 H (FCTC)
FNMA NR 63 H	A3	D3	FE2 → FNMS NORM ROM 3 H (FCTC)
FNMA NR 62 H	A2	D2	FD2 → FNMS NORM ROM 2 H (FCTC)
FNMA NR 61 H	A1	D1	EP2 → FNMS NORM ROM 1 H (FCTC)
	A0	D0	ER2 → FNMS NORM ROM 0 H (FCTC)
	CS2 CS1		

93S16 E128 (COUT)

	D3	F3
	D2	
	D1	
	D0	F2
FCTL NRC 1 H (EV2)	CLR	F1
FNMA +3V H	LD	
FNMR CLK NR 1 H	CLK	
FNMR NR S1 B H	CEP	F0
FNMS +3V H	CET	

(SLOT 24)

REVISIONS

CHK	CHANGE NO.	REV.

TITLE FRACTION NORMALIZER (FNMS)
SIZE D | CODE CS | NUMBER M8285-0-1 | REV A
SCALE — | SHEET 17 OF 21 | DIST.

"THIS DRAWING AND SPECIFICATIONS, HEREIN, ARE THE PROPERTY OF DIGITAL EQUIPMENT CORPORATION AND SHALL NOT BE REPRODUCED OR COPIED OR USED IN WHOLE OR IN PART AS THE BASIS FOR THE MANUFACTURE OR SALE OF ITEMS WITHOUT WRITTEN PERMISSION.
COPYRIGHT © 1977 DIGITAL EQUIPMENT CORPORATION"

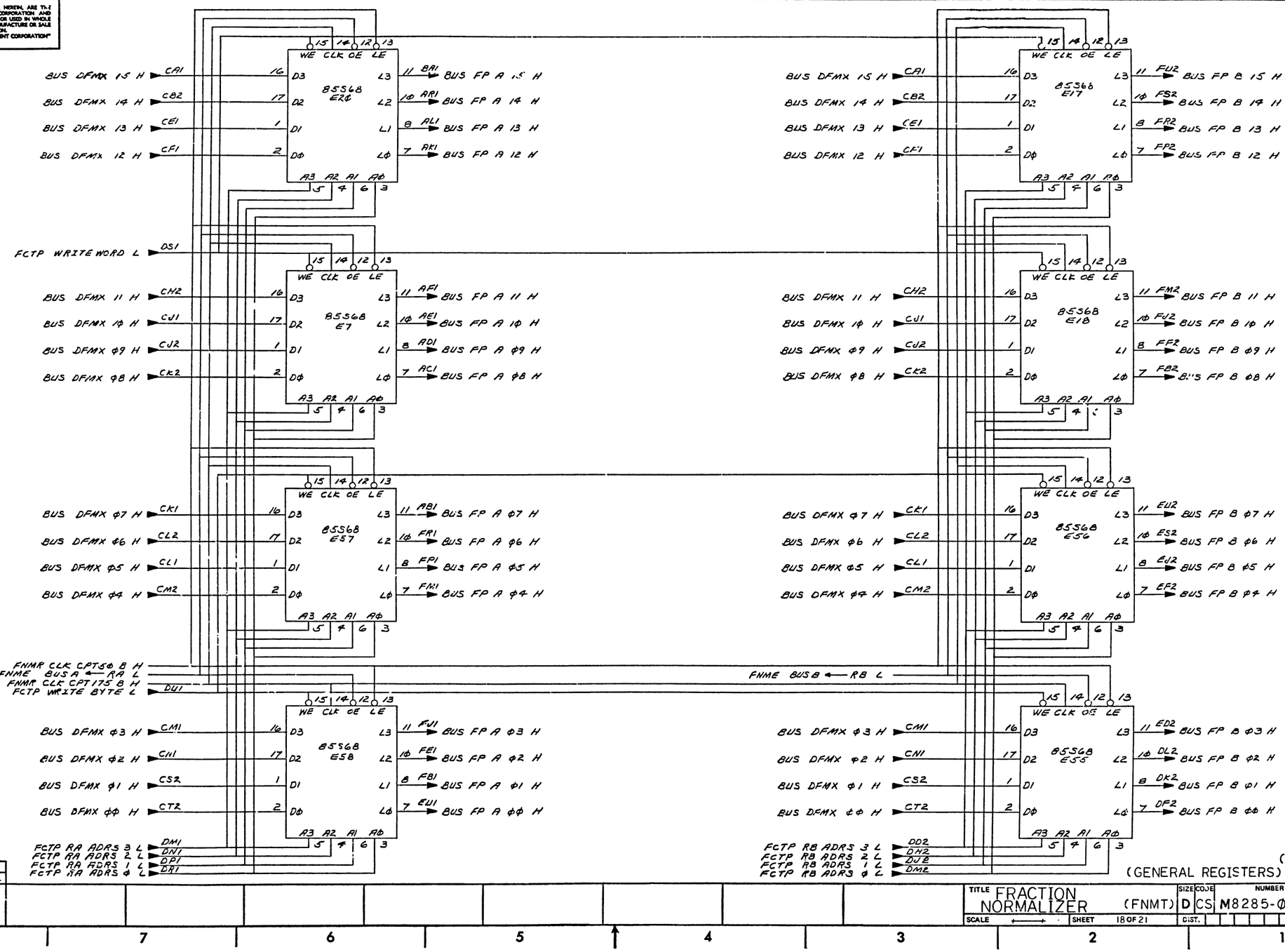

(SLOT 24)
(GENERAL REGISTERS)

REVISIONS		
CHK	CHANGE NO.	REV.

TITLE	SIZE	CODE	NUMBER	REV.
FRACTION NORMALIZER (FNMT)	D	CS	M8285-0-1	A
SCALE	SHEET 18 OF 21	DIST.		

"THIS DRAWING AND SPECIFICATIONS, HEREIN, ARE THE PROPERTY OF DIGITAL EQUIPMENT CORPORATION AND SHALL NOT BE REPRODUCED OR COPIED OR USED IN WHOLE OR IN PART AS THE BASIS FOR THE MANUFACTURE OR SALE OF ITEMS WITHOUT WRITTEN PERMISSION.
COPYRIGHT © 1977 DIGITAL EQUIPMENT CORPORATION"

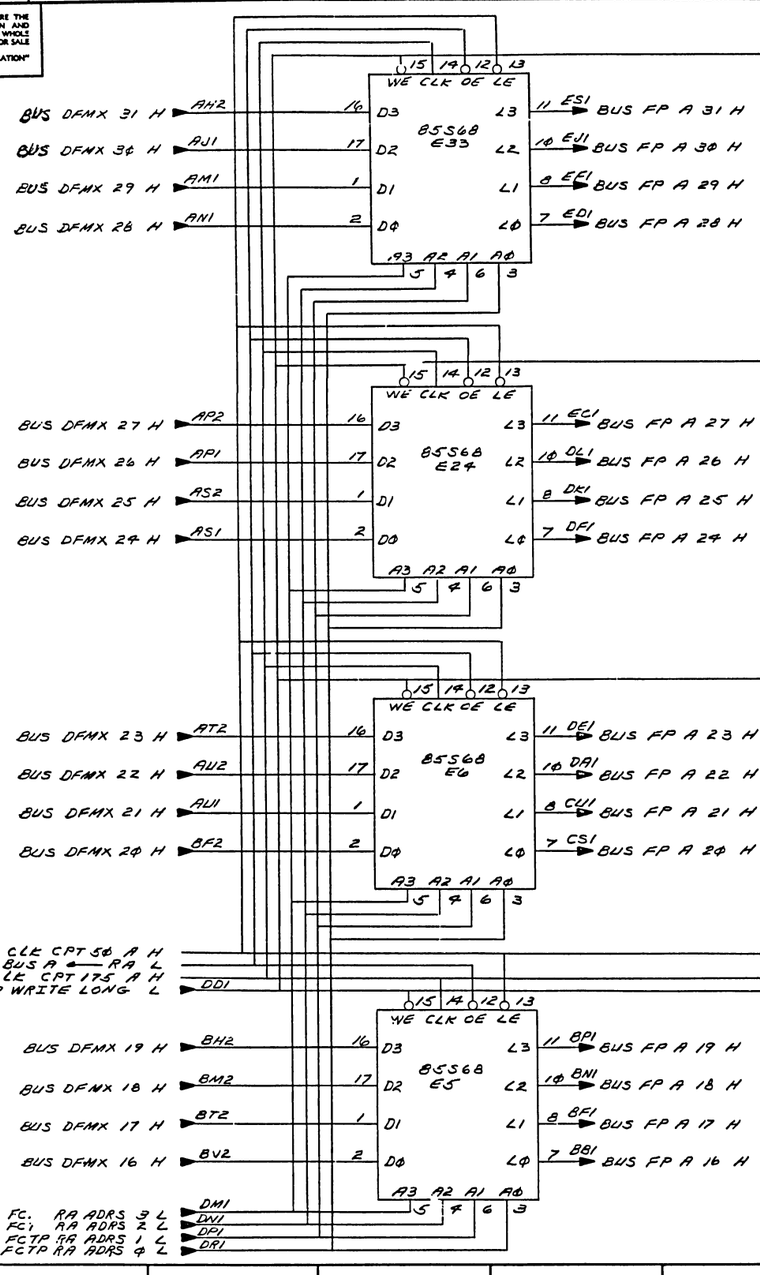

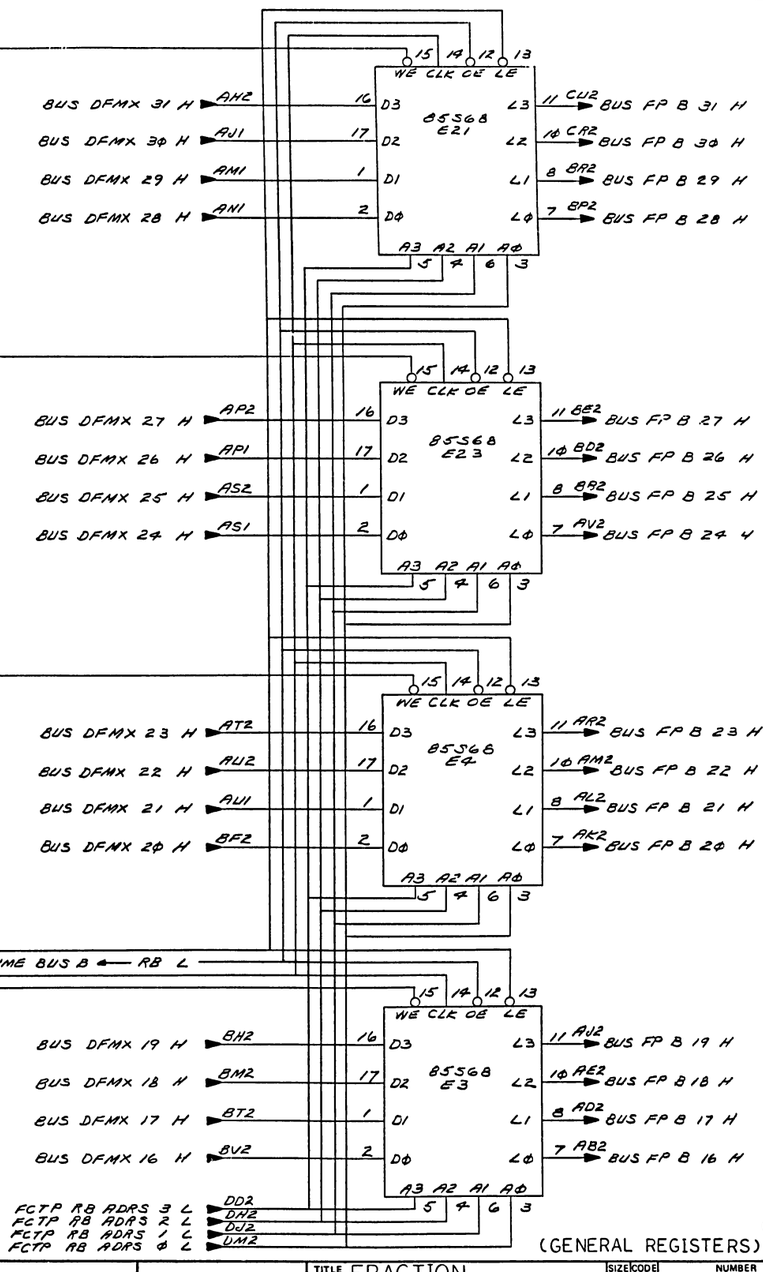

(SLOT 24)
(GENERAL REGISTERS)

REVISIONS		
CHK	CHANGE NO	REV.

TITLE	SIZE	CODE	NUMBER	REV.
FRACTION NORMALIZER (FNMU)	D	CS	M8285-0-1	A
SCALE	SHEET 19 OF 21	DIST.		

M8285-0-1 A

"THIS DRAWING AND SPECIFICATIONS, HEREIN, ARE THE PROPERTY OF DIGITAL EQUIPMENT CORPORATION AND SHALL NOT BE REPRODUCED OR COPIED OR USED IN WHOLE OR IN PART AS THE BASIS FOR THE MANUFACTURE OR SALE OF ITEMS WITHOUT WRITTEN PERMISSION.
COPYRIGHT © 1977 DIGITAL EQUIPMENT CORPORATION"

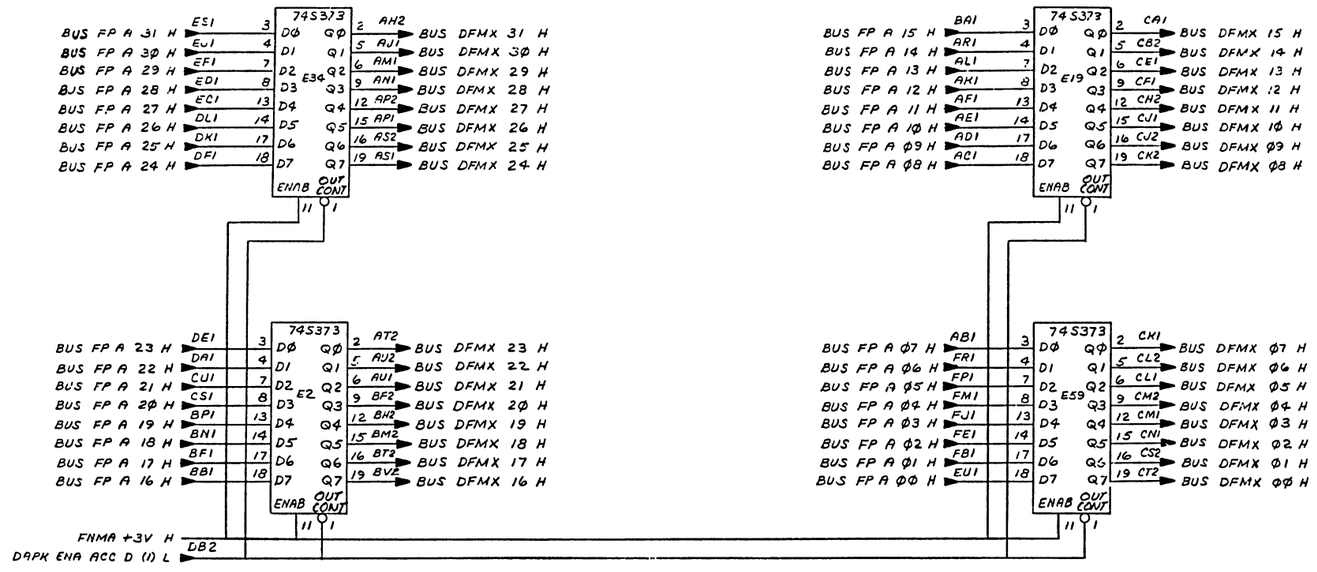

(DFMX BUS DRIVERS) (SLOT 24)

REVISIONS		
CHK	CHANGE NO.	REV.

TITLE	SIZE	CODE	NUMBER	REV.
FRACTION NORMALIZER (FNMV)	D	CS	M8285-0-1	A
SCALE —//	SHEET 20 OF 21	DIST.		

"THIS DRAWING AND SPECIFICATIONS, HEREIN, ARE THE PROPERTY OF DIGITAL EQUIPMENT CORPORATION AND SHALL NOT BE REPRODUCED OR COPIED OR USED IN WHOLE OR IN PART AS THE BASIS FOR THE MANUFACTURE OR SALE OF ITEMS WITHOUT WRITTEN PERMISSION.
COPYRIGHT © , DIGITAL EQUIPMENT CORPORATION"

NORMALIZATION ROM CONSTANTS

PROM ADDR	M7 FNMS NORM ROM 7H	M6 FNMS NORM ROM 6H	M5 FNMS NORM ROM 5H	M4 FNMS NORM ROM 4H	M3 FNMS NORM ROM 3H	M2 FNMS NORM ROM 2H	M1 FNMS NORM ROM 1H	M0 FNMS NORM ROM 0H
00	L	L	L	L	L	L	L	L
01	L	L	L	L	L	L	L	L
02	L	L	L	L	L	L	L	L
03	L	L	L	L	L	L	L	L
04	L	L	L	L	L	L	L	L
05	L	L	L	L	L	L	L	L
06	H	H	H	H	H	H	H	H
07	H	H	H	H	H	H	H	L
08	H	H	H	H	H	H	L	H
09	H	H	H	H	H	H	L	L
0A	H	H	H	H	H	L	H	H
0B	H	H	H	H	H	L	H	L
0C	H	H	H	H	H	L	L	H
0D	H	H	H	H	H	L	L	L
0E	H	H	H	H	L	H	H	H
0F	H	H	H	H	L	H	H	L
10	H	H	H	H	L	H	L	H
11	H	H	H	H	L	H	L	L
12	H	H	H	H	L	L	H	H
13	H	H	H	H	L	L	H	L
14	H	H	H	H	L	L	L	H
15	H	H	H	H	L	L	L	L
16	H	H	H	H	L	H	H	H
17	H	H	H	H	L	H	H	L
18	H	H	H	H	L	H	L	H
19	H	H	H	H	L	H	L	L
1A	H	H	H	H	L	L	H	H
1B	H	H	H	H	L	L	H	L
1C	H	H	H	H	L	L	L	H
1D	H	H	H	H	L	L	L	L
1E	H	H	H	H	L	L	L	H
1F	H	H	H	H	L	L	L	L
20	H	H	H	H	L	L	L	H
21	H	H	H	H	L	L	L	H
22	H	H	H	H	L	L	L	H
23	H	H	H	H	L	L	L	H
24	H	H	H	H	L	L	L	L
25	H	H	H	H	L	L	L	L
26	H	H	H	L	H	H	H	H
27	H	H	H	L	H	H	H	L
28	H	H	H	L	H	H	L	H
29	H	H	H	L	H	H	L	H
2A	H	H	H	L	H	H	L	H

PROM ADDR	M7 FNMS NORM ROM 7H	M6 FNMS NORM ROM 6H	M5 FNMS NORM ROM 5H	M4 FNMS NORM ROM 4H	M3 FNMS NORM ROM 3H	M2 FNMS NORM ROM 2H	M1 FNMS NORM ROM 1H	M0 FNMS NORM ROM 0H
2B	H	H	H	L	H	L	H	H
2C	H	H	H	L	H	H	L	L
2D	H	H	H	L	H	H	L	H
2E	H	H	H	L	H	L	H	H
2F	H	H	H	L	H	L	H	L
30	H	H	H	L	H	L	L	H
31	H	H	H	L	H	L	L	L
32	H	H	H	L	H	L	L	H
33	H	H	H	L	H	L	L	H
34	H	H	H	L	H	L	L	L
35	H	H	H	L	H	L	L	L
36	H	H	H	L	L	H	H	H
37	H	H	H	L	L	H	H	L
38	H	H	H	L	L	H	L	H
39	H	H	H	L	L	H	L	H
3A	H	H	H	L	L	H	L	H
3B	H	H	H	L	L	H	L	H
3C	H	H	H	L	L	H	L	L
3D	H	H	H	L	L	H	L	L
3E	H	H	H	L	L	L	H	H
3F	H	H	H	L	L	L	H	L
40	H	H	H	L	L	L	L	H
41	H	H	H	L	L	L	L	H
42	H	H	H	L	L	L	L	H
43	H	H	H	L	L	L	L	H
44	H	H	H	L	L	L	L	L
45	H	H	H	L	L	L	L	L
46	H	H	L	H	H	H	H	H
47	H	H	L	H	H	H	H	L
48	H	H	L	H	H	H	L	H
49	H	H	L	H	H	H	L	H
4A	H	H	L	H	H	H	L	H
4B	H	H	L	H	H	H	L	L
4C	H	H	L	H	H	H	L	L
4D	H	H	L	H	H	H	L	L
4E	H	H	L	H	H	L	H	H
4F	H	H	L	H	H	L	H	L
50	H	H	L	H	H	L	L	H
51	H	H	L	H	H	L	L	H
52	H	H	L	H	H	L	L	H
53	H	H	-	H	H	L	L	H
54	H	H	L	H	H	L	L	L
55	H	H	L	H	H	L	L	L

PROM ADDR	M7 FNMS NORM ROM 7H	M6 FNMS NORM ROM 6H	M5 FNMS NORM ROM 5H	M4 FNMS NORM ROM 4H	M3 FNMS NORM ROM 3H	M2 FNMS NORM ROM 2H	M1 FNMS NORM ROM 1H	M0 FNMS NORM ROM 0H
56	H	H	L	H	L	H	H	H
57	H	H	L	H	L	H	H	L
58	H	H	L	H	L	H	L	H
59	H	H	L	H	L	H	L	L
5A	H	H	L	H	L	L	H	H
5B	H	H	L	H	L	L	H	L
5C	H	H	L	H	L	L	L	H
5D	H	H	L	H	L	L	L	L
5E	H	H	L	H	L	L	L	H
5F	H	H	L	H	L	L	L	L
60	H	H	L	H	L	L	L	H
61	H	H	L	H	L	L	L	H
62	H	H	L	H	L	L	L	H
63	H	H	L	H	L	L	L	H
64	H	H	L	H	L	L	L	L
65	H	H	L	H	L	L	L	L
66	H	H	L	L	H	H	H	H
67	H	H	L	L	H	H	H	L
68	H	H	L	L	H	H	L	H
69	H	H	L	L	H	H	L	H
6A	H	H	L	L	H	H	L	H
6B	H	H	L	L	H	H	L	L
6C	H	H	L	L	H	H	L	L
6D	H	H	L	L	H	H	L	L
6E	H	H	L	L	H	L	H	H
6F	H	H	L	L	H	L	H	L
70	H	H	L	L	H	L	L	H
71	H	H	L	L	H	L	L	H
72	H	H	L	L	H	L	L	H
73	H	H	L	L	H	L	L	H
74	H	H	L	L	H	L	L	L
75	H	H	L	L	H	L	L	L
76	H	H	L	L	L	H	H	H
77	H	H	L	L	L	H	H	L
78	H	H	L	L	L	H	L	H
79	H	H	L	L	L	H	L	H
7A	H	H	L	L	L	H	L	H
7B	H	H	L	L	L	H	L	L
7C	H	H	L	L	L	H	L	L
7D	H	H	L	L	L	L	H	L
7E	H	H	L	L	L	L	H	H
7F	H	H	L	L	L	L	H	L
80	H	H	H	H	H	H	H	L

PROM ADDR	M7 FNMS NORM ROM 7H	M6 FNMS NORM ROM 6H	M5 FNMS NORM ROM 5H	M4 FNMS NORM ROM 4H	M3 FNMS NORM ROM 3H	M2 FNMS NORM ROM 2H	M1 FNMS NORM ROM 1H	M0 FNMS NORM ROM 0H
81	H	H	H	H	H	H	H	H
82	L	L	L	L	L	L	L	L
83	L	L	L	L	L	L	L	H
84	L	L	L	L	L	L	L	H
85	L	L	L	L	L	L	L	H
86	L	L	L	L	L	L	L	H
87	L	L	L	L	L	L	L	H
88	H	H	H	H	H	L	H	L
89	H	H	H	H	H	L	H	H
8A	H	H	H	H	H	H	L	L
8B	H	H	H	H	H	H	L	L
8C	H	H	H	H	H	H	L	H
8D	H	H	H	H	H	H	L	H
8E	H	H	H	H	H	H	L	H
8F	H	H	H	H	H	H	L	H
90	H	H	H	H	H	L	H	H
91	H	H	H	H	L	H	H	H
92	H	H	H	H	H	L	L	L
93	H	H	H	H	H	L	L	L
94	H	H	H	H	H	L	L	H
95	H	H	H	H	H	L	L	H
96	H	H	H	H	H	L	L	H
97	H	H	H	H	H	L	L	H
98	H	H	H	H	H	L	H	L
99	H	H	H	H	L	L	H	H
9A	H	H	H	H	L	H	L	L
9B	H	H	H	H	L	L	H	L
9C	H	H	H	H	L	H	L	H
9D	H	H	H	H	L	H	L	H
9E	H	H	H	H	L	H	L	H
9F	H	H	H	H	L	H	L	L
A0	H	H	H	L	H	H	H	L
A1	H	H	H	L	H	H	H	H
A2	H	H	H	H	L	L	L	L
A3	H	H	H	H	L	L	L	L
A4	H	H	H	H	L	L	L	H
A5	H	H	H	H	L	L	L	H
A6	H	H	H	H	L	L	L	H
A7	H	H	H	H	L	L	L	H
A8	H	H	H	L	H	L	H	L
A9	H	H	H	L	H	L	L	H
AA	H	H	H	L	H	H	L	L
AB	H	H	H	L	H	L	L	L

PROM ADDR	M7 FNMS NORM ROM 7H	M6 FNMS NORM ROM 6H	M5 FNMS NORM ROM 5H	M4 FNMS NORM ROM 4H	M3 FNMS NORM ROM 3H	M2 FNMS NORM ROM 2H	M1 FNMS NORM ROM 1H	M0 FNMS NORM ROM 0H
AC	H	H	H	L	H	H	L	H
AD	H	H	H	L	H	H	L	L
AE	H	H	H	L	H	L	H	H
AF	H	H	H	L	H	L	H	H
B0	H	H	H	L	L	H	H	L
B1	H	H	H	L	L	H	L	H
B2	H	H	H	L	H	L	L	L
B3	H	H	H	L	H	L	L	L
B4	H	H	H	L	H	L	L	H
B5	H	H	H	L	H	L	L	H
B6	H	H	H	L	H	L	L	H
B7	H	H	H	L	H	L	L	H
B8	H	H	H	L	L	L	H	L
B9	H	H	H	L	L	L	H	H
BA	H	H	H	L	L	H	L	L
BB	H	H	H	L	L	H	L	L
BC	H	H	H	L	L	H	L	H
BD	H	H	H	L	L	H	L	H
BE	H	H	H	L	L	H	L	H
BF	H	H	H	L	L	H	L	H
C0	H	H	L	H	H	H	H	L
C1	H	H	L	H	H	H	H	H
C2	H	H	H	L	L	L	L	L
C3	H	H	H	L	L	L	L	L
C4	H	H	H	L	L	L	L	H
C5	H	H	H	L	L	L	L	H
C6	H	H	H	L	L	L	L	H
C7	H	H	H	L	L	L	L	H
C8	H	H	L	H	H	L	H	L
C9	H	H	L	H	H	L	H	H
CA	H	H	L	H	H	H	L	L
CB	H	H	L	H	H	H	L	L
CC	H	H	L	H	H	H	L	H
CD	H	H	L	H	H	H	L	H
CE	H	H	L	H	H	L	H	H
CF	H	H	L	H	H	H	L	H
D0	H	H	L	H	L	H	H	H
D1	H	H	L	H	L	H	H	H
D2	H	H	L	H	H	L	L	L
D3	H	H	L	H	H	L	L	L
D4	H	H	L	H	H	L	L	H
D5	H	H	L	H	H	L	L	H
D6	H	H	L	H	H	L	L	H

PROM ADDR	M7 FNMS NORM ROM 7H	M6 FNMS NORM ROM 6H	M5 FNMS NORM ROM 5H	M4 FNMS NORM ROM 4H	M3 FNMS NORM ROM 3H	M2 FNMS NORM ROM 2H	M1 FNMS NORM ROM 1H	M0 FNMS NORM ROM 0H
D7	H	H	L	H	H	L	L	H
D8	H	H	L	H	H	L	L	L
D9	H	H	L	H	L	L	H	H
DA	H	H	L	H	L	L	H	L
DB	H	H	L	H	L	L	H	L
DC	H	H	L	H	L	L	L	H
DD	H	H	L	H	L	L	L	H
DE	H	H	L	H	L	L	L	H
DF	H	H	L	H	L	L	L	H
E0	H	H	L	L	H	H	H	L
E1	H	H	L	L	H	H	H	H
E2	H	H	L	H	L	L	L	L
E3	H	H	L	H	L	L	L	L
E4	H	H	L	H	C	L	L	H
E5	H	H	L	H	L	L	L	H
E6	H	H	L	H	L	L	L	H
E7	H	H	L	H	L	L	L	H
E8	H	H	L	L	H	H	L	L
E9	H	H	L	L	H	H	L	H
EA	H	H	L	L	H	H	L	L
EB	H	H	L	L	H	H	L	L
EC	H	H	L	L	H	H	L	H
ED	H	H	L	L	H	H	L	H
EE	H	H	L	L	H	L	H	H
EF	H	H	L	L	H	L	H	L
F0	H	H	L	L	L	H	H	L
F1	H	H	L	L	L	H	H	H
F2	H	H	L	L	H	L	L	L
F3	H	H	L	L	H	L	L	L
F4	H	H	L	L	H	L	L	H
F5	H	H	L	L	H	L	L	H
F6	H	H	L	L	H	L	L	H
F7	H	H	L	L	H	L	L	H
F8	H	H	L	L	L	L	H	L
F9	H	H	L	L	L	L	H	H
FA	H	H	L	L	L	H	L	L
FB	H	H	L	L	L	H	L	L
FC	H	H	L	L	L	H	L	H
FD	H	H	L	L	L	H	L	H
FE	H	H	L	L	L	H	H	H
FF	H	H	L	L	L	H	H	H

NORM ROM CONSTANTS

(23-034B1-01)

(SLOT 24)

DRN.		FIRST USED ON	digital
CHK'D			
ENG.			
PROJ. ENG.		TITLE	FRACTION NORMALIZER (FNM)
PROD.			
NEXT HIGHER ASSY.			
=P780		SIZE D	CODE CS
SCALE		NUMBER M8285-0-1	REV. A
SHEET 21 OF 21		DIST.	

REVISIONS | REV. | CHANGE NO. | CHK

COMPONENT SIDE VIEW

11.91 IN
302.52 MM
F.B.S

digital

TITLE FRACTION MULTIP. HIGH (FMH)

SIZE D | CODE | DWG NO M8286-0-0 | REV

E UA M8286-0-0 D

"THIS DRAWING AND SPECIFICATIONS, HEREIN, ARE THE PROPERTY OF DIGITAL EQUIPMENT CORPORATION AND SHALL NOT BE REPRODUCED OR COPIED OR USED IN WHOLE OR IN PART AS THE BASIS FOR THE MANUFACTURE OR SALE OF ITEMS WITHOUT WRITTEN PERMISSION.
COPYRIGHT © 1975 DIGITAL EQUIPMENT CORPORATION"

LAYER 1

50130988-P1 M8286

REVISIONS		
ONE	CHANGE NO.	REV

TITLE	SIZE	NUMBER	REV.
FRACTION MULTIP HIGH (FMH)	E UA	M8286-0-0	D
SCALE 2/1 SHEET 2 OF 3	DIST.		

M8285-0-0 UA E

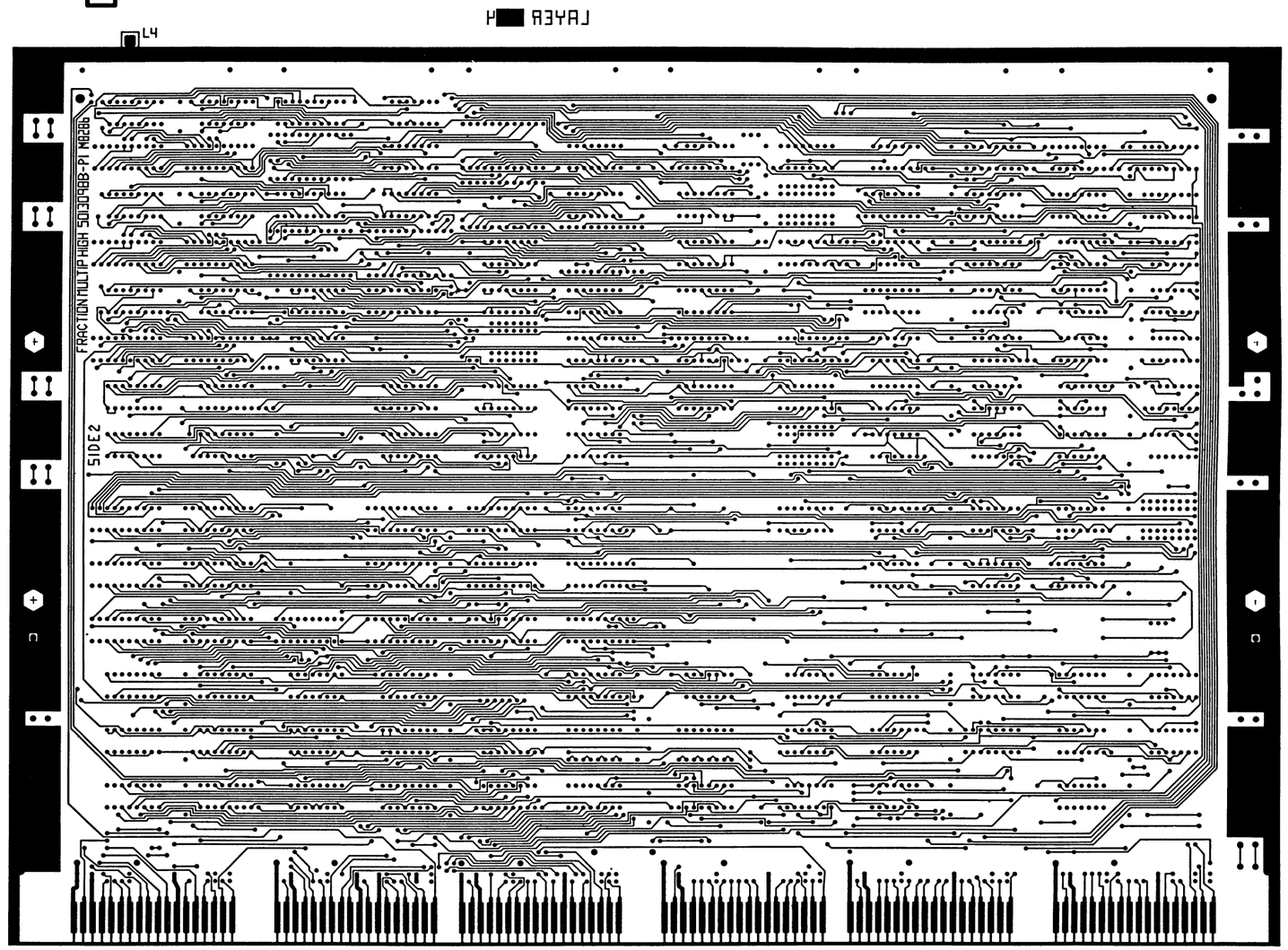

"THIS DRAWING AND SPECIFICATIONS, HEREIN, ARE THE PROPERTY OF DIGITAL EQUIPMENT CORPORATION AND SHALL NOT BE REPRODUCED OR COPIED OR USED IN WHOLE OR IN PART AS THE BASIS FOR THE MANUFACTURE OR SALE OF ITEMS WITHOUT WRITTEN PERMISSION. COPYRIGHT © , DIGITAL EQUIPMENT CORPORATION"

REVISIONS		
CHK	CHANGE NO.	REV

TITLE	SIZE	CODE	NUMBER	REV.
FRACTION MULTIP HIGH (FMH)	E	UA	M8286-Ø-Ø	D
SCALE 2/1 SHEET 3 OF 3	DIST			

TW

LINE	ITEM	DOCUMENT NUMBER	PART NUMBER	DESCRIPTION	QTY PER VARIATION 00	REFERENCE DESIGNATOR
1	1	D-MD-5013098-0-0	5013098-00	M8286	1	
2	2		1012784-00	.047 MFD 50V -20+80 CER	53	C1-C5,C7-C54
3	3		1012084-01	8 MFD 25V G% 30D AL EL	7	C55-C61
4	4		1300250-00	150 1/4W 5% CC	4	R2,R4,R10,R12
5	5		1300247-00	120 1/4W 5% CC	4	R1,R3,R9,R11
6	6		1300295-00	330 1/4W 5% CC	4	R5,R7,R13,R15
7	7		1301890-00	560 1/4W 5% CC	4	R20,R21,R24,R18
8	8		1913788-00	26S10 TRANSCEIVER,BUS,QUA	4	E1,E15,E29,E39
9	9		1910552-00	74S194 SHIFT REG,,4BIT RIGH	20	E2,E16,E30,E33,E34,E40,E49,E50,
						CONT E52,E53,E60,E61,E70,E72,E74,E75,
						CONT E78,E81,E82,E89
10	10		1911641-00	SN 74S257 MUX,QUAD 2 TO 1	7	E3,E17,E31,E41,E65,E68,E69
11	11		1913670-00	74S373 LATCH 8BIT TRASP TR	13	E4,E5,E6,E19,E18,E20,E32,E42,
						CONT E43,E44,E54,E55,E56
12	12		1910956-00	74S151 MUX 1 OF 8	10	E7,E8,E21,E22,E45,E46,E57,E58,
						CONT E104,E120
13	13		23012B1-00	B1-01 OR CUSTOM MASKED ROM (74S2	6	E9,E11,E13,E23,E25,E27
14	14		1910531-00	DEC 74S181 ALU-4BIT	6	E35,E37,E48,E62,E63,E73
15	15		1910548-00	74S157 MUX 1 OF 2 (QUAD)	6	E10,E12,E14,E24,E26,E28
16	16		1913671-00	74S374 FF-D OCTAL TRISTATE	4	E36,E38,E47,E91
17	17		1912389-00	74S08 AND GATE-QUAD 2IN,PO	3	E51,E84,E117
18	18		1911415-00	10125 ECL TO TTL TRNSLTR	2	E64,E76
19	19		1913493-00	74S241 OCTAL BUFFER,TRI-STA	2	E66,E67
20	20		1913700-00	74S381 ALU-4BIT	3	E71,E79,E90
21	21		1912388-00	74S02 NOR GATE-QUAD 2IN,PO	5	E77,E98,E107,E110,E118
22	22		1912097-00	SN 74S182 LOOK AHD CARRY GEN	1	E80
23	23		1910534-00	74S04 INVERTER GATE-HEX 1I	5	E83,E85,E101,E105,E119
24	24		1910537-00	74S11 AND GATE-TRIPLE 3INP	2	E86,E96
25	25		1910957-00	74S175 FF-D QUAD COMMON CLO	5	E87,E115,E127,E137,E138
26	26		1913294-00	93S16 COUNTER,SYNCH UP BIN	1	E93

REVISION HISTORY			BASIC PART NO: M8286
ENG	ECO NUMBER	REV	SECTION A OF A
---	INIT	*	SECTION,VARIATION INDEX
WH	00001	D	[A] 00
			[B]
			[C]
			[D]
			[E]
			[F]
			[H]
			[J]
			[K]
			[L]
			[M]
			[N]

							D	I	G	I	T	A	L

DRN: F SMART	DATE: 14-OCT-77
CHK'D: F SMART	DATE: 14-OCT-77
DES.ENG: STAN LACKEY	DATE: 21-OCT-77
RESP.ENG.: STAN LACKEY	DATE: 21-OCT-77
MFG.ENG.: MIKE TERELLA	DATE: 21-OCT-77

TITLE PARTS LIST

FRACTION MULTIPLY HIGH

DOCUMENT NUMBER

SIZE	CODE	NUMBER	REV
K	PL	M8286-0-DBP	D

ASSEMBLY NUMBER:	TOP DOCUMENT NUMBER:	FILE NAME:	EDIT #
D-UA-M8286-0-0	M8286	Z0630D.PLS	12

"THIS DRAWING AND SPECIFICATIONS HEREIN, ARE THE PROPERTY OF DIGITAL EQUIPMENT CORPORATION AND SHALL NOT BE REPRODUCED OR COPIED OR USED IN WHOLE OR IN PART AS THE BASIS FOR THE MANUFACTURE OR SALE OF ITEMS WITHOUT WRITTEN PERMISSION. COPYRIGHT (C) 1979, DIGITAL EQUIPMENT CORPORATION "

TW

LINE	ITEM	DOCUMENT NUMBER	PART NUMBER	DESCRIPTION	QTY PER VARIATION 00	REFERENCE DESIGNATOR
27	27		1910536-00	74S10 NAND GATE-TRIPLE 3IN	4	E94,E114,E124,E135
28	28		1910532-00	74S00 NAND GATE-QUAD 2INS	2	E95,E126
29	29	BLANK	1910651-00	*** THIS ITEM IS NOT USED ***	-	
30	30		1910542-00	74S64 A-O-I GATE 4-2-3-2	9	E99,E108,E109,E112,E113,E122,
					CONT	E123,E129,E130
31	31		1912746-00	DEC 74S37 NAND GATE-QUAD 2IN	3	E100,E132,E133
32	32		1910545-00	74S112 FF-JK DUAL,EDGE TRIG	1	E102
33	33		1910544-00	74S74 FF-D DUAL,EDGE TRIGG	1	E103
34	34		1910550-00	74S174 FF-D HEX	2	E106,E116
35	35		1911712-00	74S51 AND-OR GATE-INVERT D	3	E121,E111,E97
36	36		1910539-00	74S20 NAND GATE-DUAL 4INPU	2	E125,E136
37	37		1911675-00	74S138 DECODER/DEMUX 3-8 LIN	1	E128
38	38		1910541-00	74S40 NAND GATE-DUAL 4IN,B	1	E134
39	39		1210711-02	HANDLE,MODULE,HEX	1	
40	40		9000024-01	EYELET, ROLLED FLANGE, .121 OD X	12	
41	41		1301972-00	270 1/4W 5% CC	8	R6,R8,R14,R16,R19,R22,R23,R17
42	42		1300309-00	390 1/4W 5% CC	1	R25
43	43		1301424-00	680 1/4W 5% CC	1	R26

0 NOTE: IC SPARE LOCATIONS ARE E59,E131,E88,E92

DIGITAL	TITLE	SIZE	CODE	DOCUMENT NUMBER	REV.
	FRACTION MULTIPLY HIGH SECTION A OF A	K	PL	M8286-0-DBP	D

TW

"THIS DRAWING AND SPECIFICATIONS, HEREIN, ARE THE PROPERTY OF DIGITAL EQUIPMENT CORPORATION AND SHALL NOT BE REPRODUCED OR COPIED OR USED IN WHOLE OR IN PART AS THE BASIS FOR THE MANUFACTURE OR SALE OF ITEMS WITHOUT WRITTEN PERMISSION.
COPYRIGHT © 1977 , DIGITAL EQUIPMENT CORPORATION"

BUS FPA
BUS FPB
32
24
15:00
07:00
31:24
23:16
32,06:00
MP00
MP01
FMHB
MPLIER BUS
MP 63:00
FMHC
MPLIER NIBBLE SEL MUX
4
FMLB,C,R
MP7:4
MP3:0
MC1
MC0
MCINT
FMHA
31:16 MCAND BUS
16 OF 32
ROM B 4X4 MULT
ROM A 4X4 MULT
FMHD
FMHE
12
24
ROM SEL MUX
240F64
ROM STRG
FMLR MCAND BUS 19:16
FMHD PALU
FMHE PALU
FMHF PPROD LATCH
FMHH PPROD LATCH
FMHK CARRY HOLD
CIN
CO
SALU
FMLR
FMLR ROM STRG 21:20
PARTIAL PRODUCT
FMHH PPROD LATCH
FMLR PPROD 23,22
FMLJ LSH 03:00
FMHF AALU
FMHF ACCM
FMHK CARRY HOLD
FMHH AALU
FMHH ACCM
ACCUMULATION
FMLR ACCM 23:20
12 OF 32
FINAL PRODUCT
FMHJ SALU
31:20
CARRYS FROM PALU, SALU
CARRY 16
FMLF
FMHL OUT BUF
33:20 06:00
FMHK TEMP
29:20
IR
(FCT)
(CLK)
CONTROL LOGIC
FMHM,N,P
CONTROL BITS
STATE
STATUS
ID BUS XCVR
FMHR
LR
FMHS
31:16
FPA BUS
ID BUS

(BLOCK DIAGRAM) (SLOT 25)

REVISIONS			
CHK	CHANGE NO.	REV.	
	M8286-00001	A	
	M8286-00002	B	
	M8286-00003	C	
	M8286-TW004	D	

DRN.		10-3-77
CHK'D		10-19-77
ENG.	Stan Ludia	11-19-77
PROJ. ENG.		10-19-77
PROD.		11-21-77
NEXT HIGHER ASSY.	B-DD-M8286-0	
SCALE		
SHEET	1 OF 20	

FIRST USED ON FP780

digital

TITLE: FRACT MUL HIGH

SIZE D | CODE CS | NUMBER M8286-0-1 | REV. D

DIST.

"THIS DRAWING AND SPECIFICATIONS, HEREIN, ARE THE PROPERTY OF DIGITAL EQUIPMENT CORPORATION AND SHALL NOT BE REPRODUCED OR COPIED OR USED IN WHOLE OR IN PART AS THE BASIS FOR THE MANUFACTURE OR SALE OF ITEMS WITHOUT WRITTEN PERMISSION.
COPYRIGHT ©, 1977 DIGITAL EQUIPMENT CORPORATION"

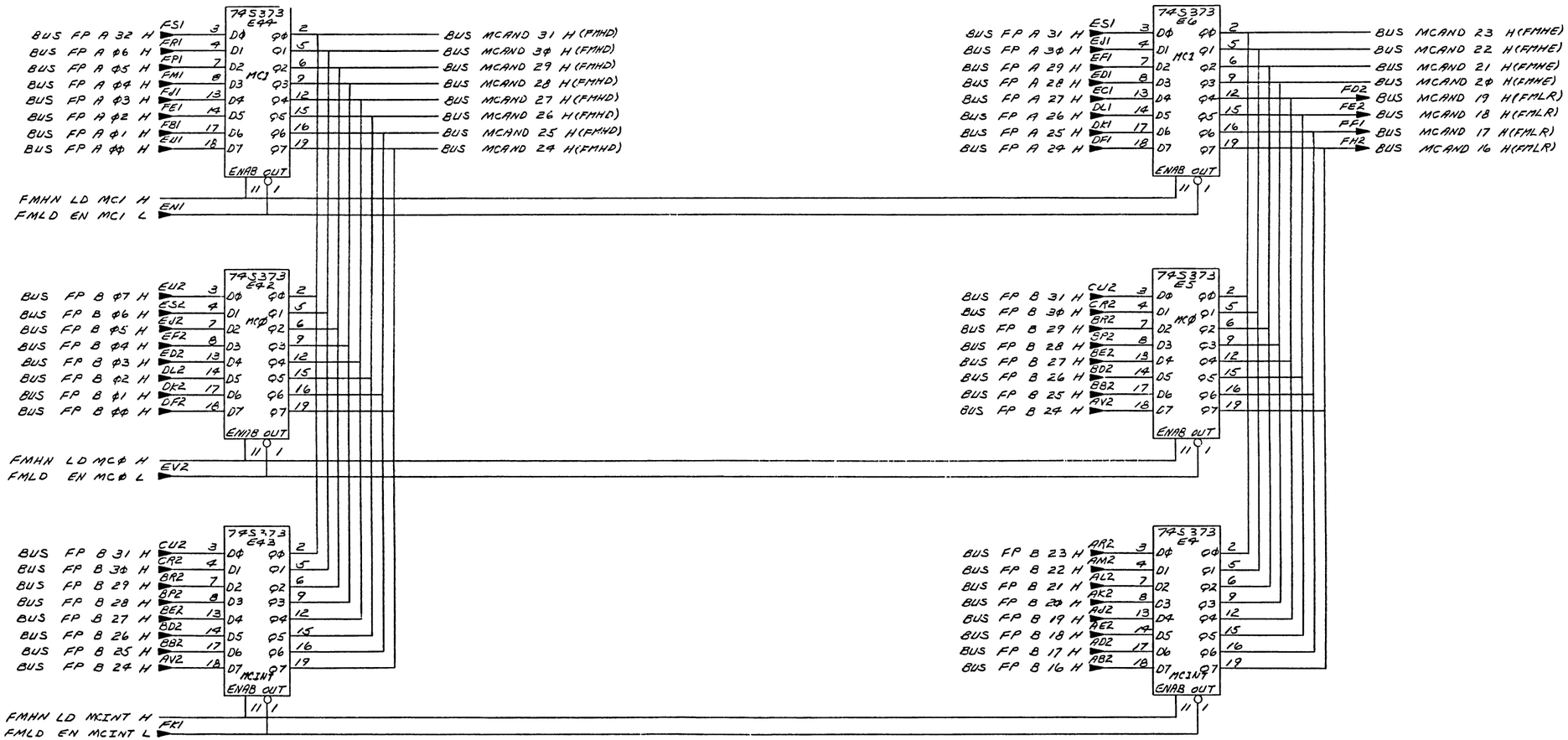

(MULTIPLICAND LATCH) (SLOT 25)

REVISIONS		
CHK	CHANGE NO.	REV.

TITLE	SIZE	CODE	NUMBER	REV.
FRACT MUL HIGH (FMHA)	D	CS	M8286-Ø-1	D
SCALE	SHEET 2 OF 20	DIST.		

DEC FORM NO. DRD 150

"THIS DRAWING AND SPECIFICATIONS, HEREIN, ARE THE PROPERTY OF DIGITAL EQUIPMENT CORPORATION AND SHALL NOT BE REPRODUCED OR COPIED OR USED IN WHOLE OR IN PART AS THE BASIS FOR THE MANUFACTURE OR SALE OF ITEMS WITHOUT WRITTEN PERMISSION.
COPYRIGHT ©1977 DIGITAL EQUIPMENT CORPORATION"

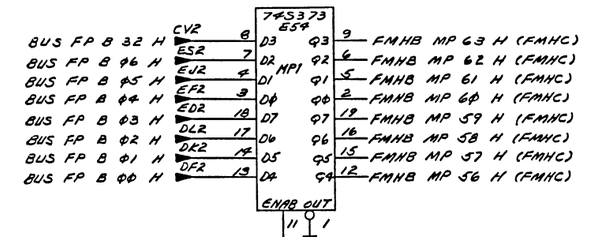

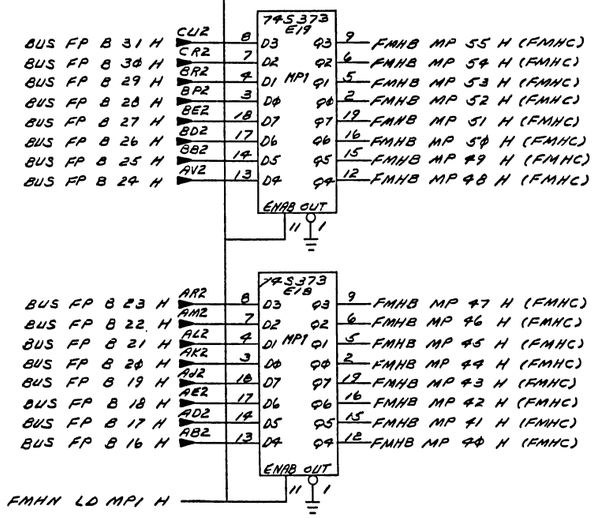

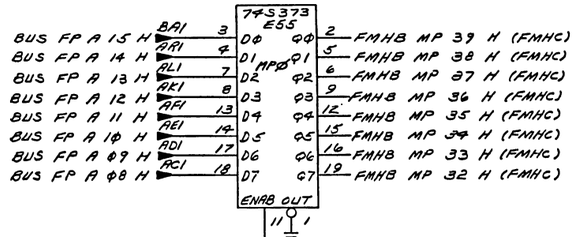

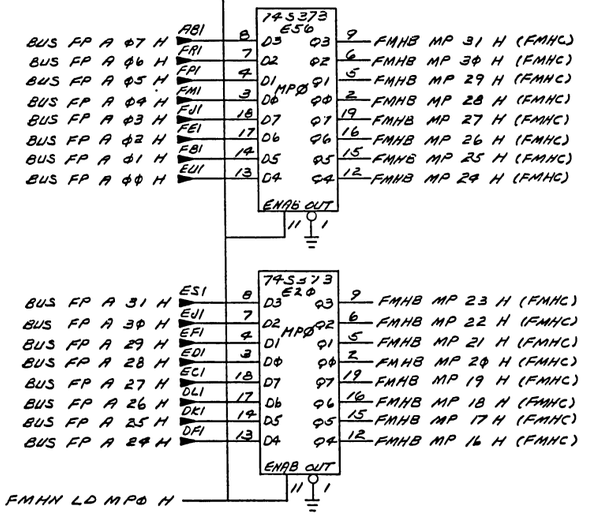

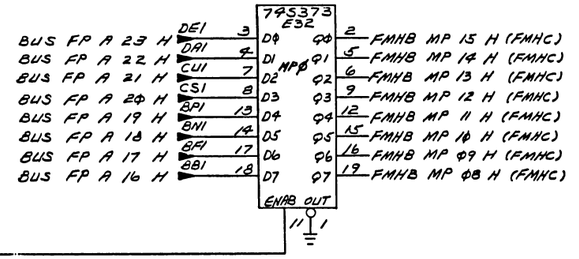

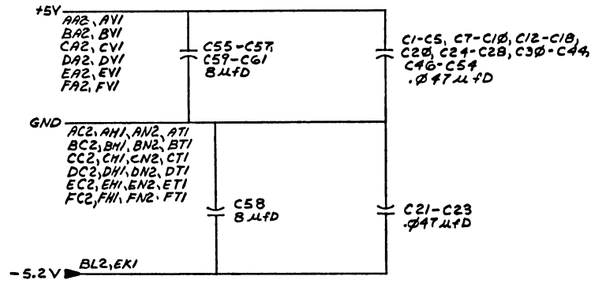

REVISIONS		
CHK	CHANGE NO.	REV.

(MPLIER LATCH) (SLOT 25)

TITLE	SIZE	CODE	NUMBER	REV.
FRACT MUL HIGH (FMHB)	D	CS	M8286-01	D
SCALE	SHEET 3 OF 20		DIST.	

"THIS DRAWING AND SPECIFICATIONS, HEREIN, ARE THE PROPERTY OF DIGITAL EQUIPMENT CORPORATION AND SHALL NOT BE REPRODUCED OR COPIED OR USED IN WHOLE OR IN PART AS THE BASIS FOR THE MANUFACTURE OR SALE OF ITEMS WITHOUT WRITTEN PERMISSION.
COPYRIGHT © 1977 DIGITAL EQUIPMENT CORPORATION"

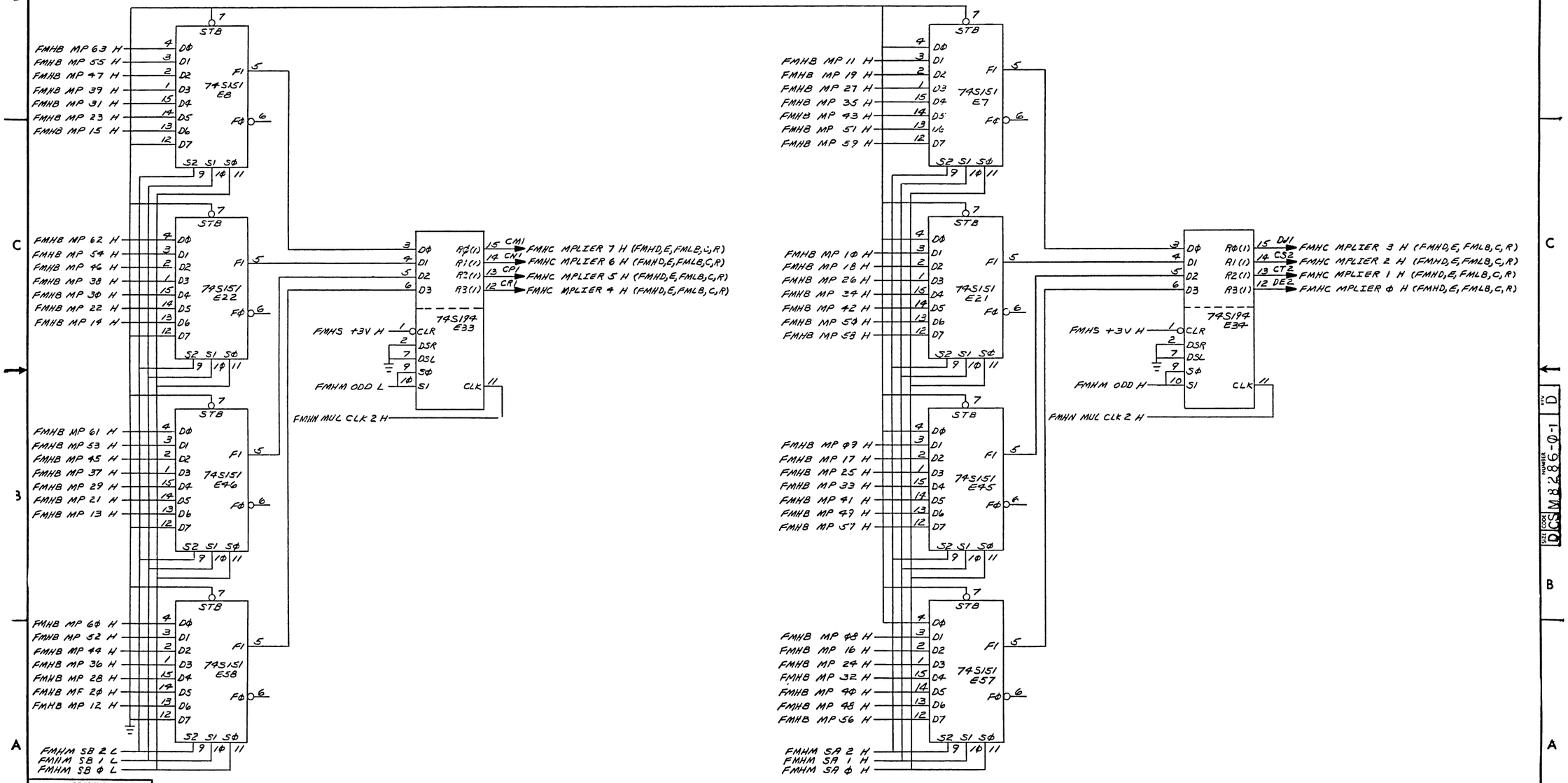

(MULTIPLIER NIBBLE SELECT (SLOT 25)

REVISIONS		
CHK	CHANGE NO.	REV.

TITLE	SIZE	CODE	NUMBER	REV.
FRACT MUL HIGH (FMHC)	D	CS	M8286-0-1	D
SCALE	SHEET 4 OF 20	DIST.		

SIZE D CODE CS NUMBER M8286-0-1 REV. D

"THIS DRAWING AND SPECIFICATIONS, HEREIN, ARE THE PROPERTY OF DIGITAL EQUIPMENT CORPORATION AND SHALL NOT BE REPRODUCED OR COPIED OR USED IN WHOLE OR IN PART AS THE BASIS FOR THE MANUFACTURE OR SALE OF ITEMS WITHOUT WRITTEN PERMISSION.
COPYRIGHT © 1977 DIGITAL EQUIPMENT CORPORATION"

FMHC MPLIER 7 H
FMHC MPLIER 6 H
FMHC MPLIER 5 H
FMHC MPLIER 4 H
BUS MCAND 31 H
BUS MCAND 30 H
BUS MCAND 29 H
BUS MCAND 28 H

23-0128I-00 E11 ROM B — A7 A6 A5 A4 A3 A2 A1 A0 — D7 D6 D5 D4 D3 D2 D1 D0 — EN1 EN0

FMHC MPLIER 3 H
FMHC MPLIER 2 H
FMHC MPLIER 1 H
FMHC MPLIER 4 H

23-0128I-00 E25 ROM A — A7 A6 A5 A4 A3 A2 A1 A0 — D7 D6 D5 D4 D3 D2 D1 D0 — EN1 EN0

BUS MCAND 27 H
BUS MCAND 26 H
BUS MCAND 25 H
BUS MCAND 24 H

23-0128I-00 E13 ROM B — A7 A6 A5 A4 A3 A2 A1 A0 — D7 D6 D5 D4 D3 D2 D1 D0 — EN1 EN0

23-0128I-00 E27 ROM A — A7 A6 A5 A4 A3 A2 A1 A0 — D7 D6 D5 D4 D3 D2 D1 D0 — EN1 EN0

74S157 E12 — B2 A2 B1 A1 B3 A3 B0 A0 — F2 F1 F3 F0 — S0 STB
74S157 E26 — B2 A2 B1 A1 B3 A3 B0 A0 — F2 F1 F3 F0 — S0 STB
74S157 E14 — B2 A2 B1 A1 B3 A3 B0 A0 — F2 F1 F3 F0 — S0 STB
74S157 E28 — B2 A2 B1 A1 B3 A3 B0 A0 — F2 F1 F3 F0 — S0 STB

FMHM ODD L

ROM STORAGE 74S374 E36 — D5 D0 D4 D1 D7 D2 D6 D3 — F5 F0 F4 F1 F7 F2 F6 F3 — CLK ENAB
ROM STORAGE 74S374 E38 — D5 D0 D4 D1 D7 D2 D6 D3 — F5 F0 F4 F1 F7 F2 F6 F3 — CLK ENAB

FMHN MUL CLK 2 H

74S08 E51 — FMHD ROM STRG 35 H (FMHF)
74S08 E51 — FMHD ROM STRG 34 H (FMHF)
FMHD ROM STRG 25 H (FMHE)
FMHD ROM STRG 29 H (FMHE)

PALU 74S181 E35 — A B — B3 A3 B2 A2 B1 A1 B0 A0 — F3 F2 F1 F0 — COUT G P — S3 S2 S1 S0 M CIN

FMHD CAB L (FMHK)
FMHD PALU 33 H (FMHF)
FMHD PALU 32 H (FMHF)
FMHD PALU 31 H (FMHF)
FMHD PALU 30 H (FMHF)
FMHS +3V H
FMHK CAB L

PALU 74S181 E37 — A B — B3 A3 B2 A2 B1 A1 B0 A0 — F3 F2 F1 F0 — COUT G P — S3 S2 S1 S0 M CIN

FMHD CA7 L (FMHK)
FMHD PALU 29 H (FMHF)
FMHD PALU 28 H (FMHF)
FMHD PALU 27 H (FMHH)
FMHD PALU 26 H (FMHH)
FMHE ROM STRG 27 H
FMHE ROM STRG 26 H
FMHS +3V H
FMHK CB7 L

REVISIONS

CHK	CHANGE NO.	REV.

(MULTIPLIER PIPE 1) (SLOT 25)

TITLE	SIZE	CODE	NUMBER	REV.
FRACT MUL HIGH (FMHD)	D	CS	M8286-0-1	D
SCALE	SHEET 5 OF 20	DIST.		

DEC FORM NO. DDD 150

"THIS DRAWING AND SPECIFICATIONS, HEREIN, ARE THE PROPERTY OF DIGITAL EQUIPMENT CORPORATION AND SHALL NOT BE REPRODUCED OR COPIED OR USED IN WHOLE OR IN PART AS THE BASIS FOR THE MANUFACTURE OR SALE OF ITEMS WITHOUT WRITTEN PERMISSION.
COPYRIGHT © 1977 DIGITAL EQUIPMENT CORPORATION"

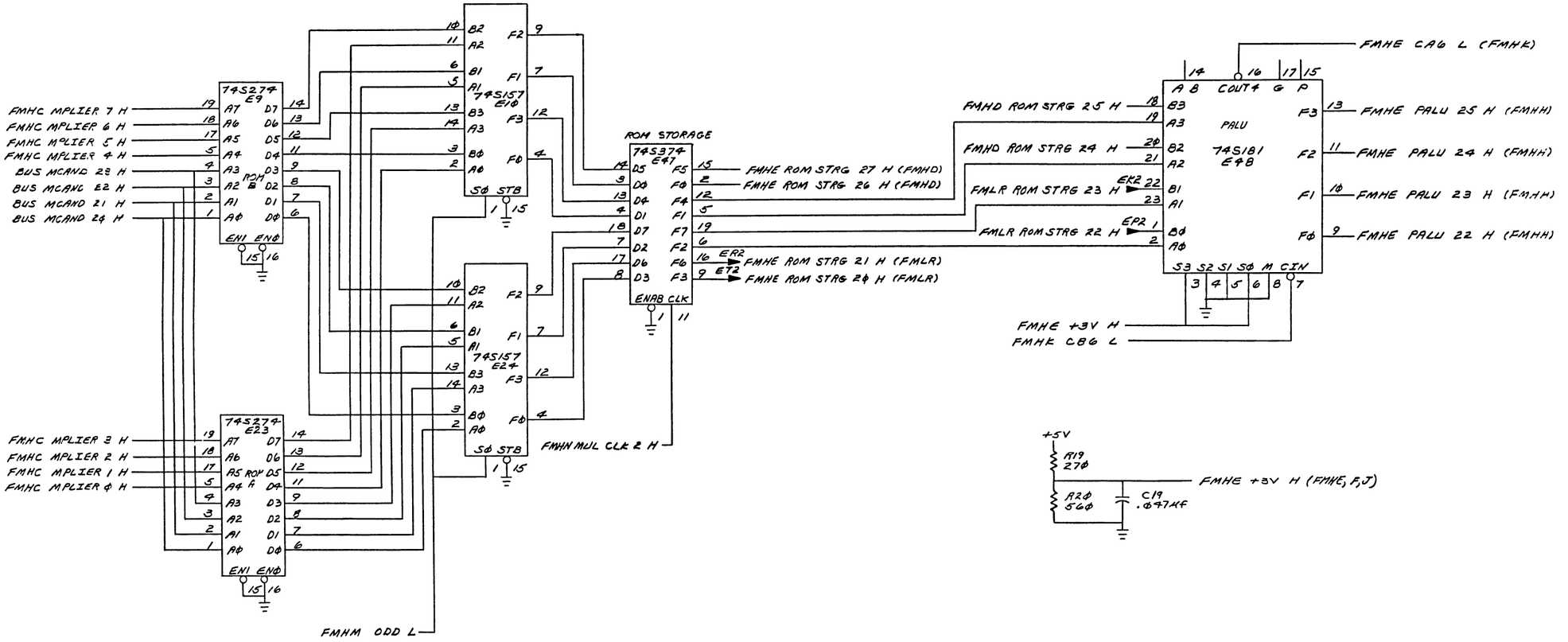

REVISIONS		
CHK	CHANGE NO.	REV.

(MULTIPLIER PIPE 2) (SLOT 25)

TITLE	SIZE	CODE	NUMBER	REV.
FRACT MUL HIGH (FMHE)	D	CS	M8286-0-1	D
SCALE	SHEET 6 OF 20	DIST.		

M8286-0-1 REV. D

"THIS DRAWING AND SPECIFICATIONS, HEREIN, ARE THE PROPERTY OF DIGITAL EQUIPMENT CORPORATION AND SHALL NOT BE REPRODUCED OR COPIED OR USED IN WHOLE OR IN PART AS THE BASIS FOR THE MANUFACTURE OR SALE OF ITEMS WITHOUT WRITTEN PERMISSION.
COPYRIGHT ©1977 DIGITAL EQUIPMENT CORPORATION"

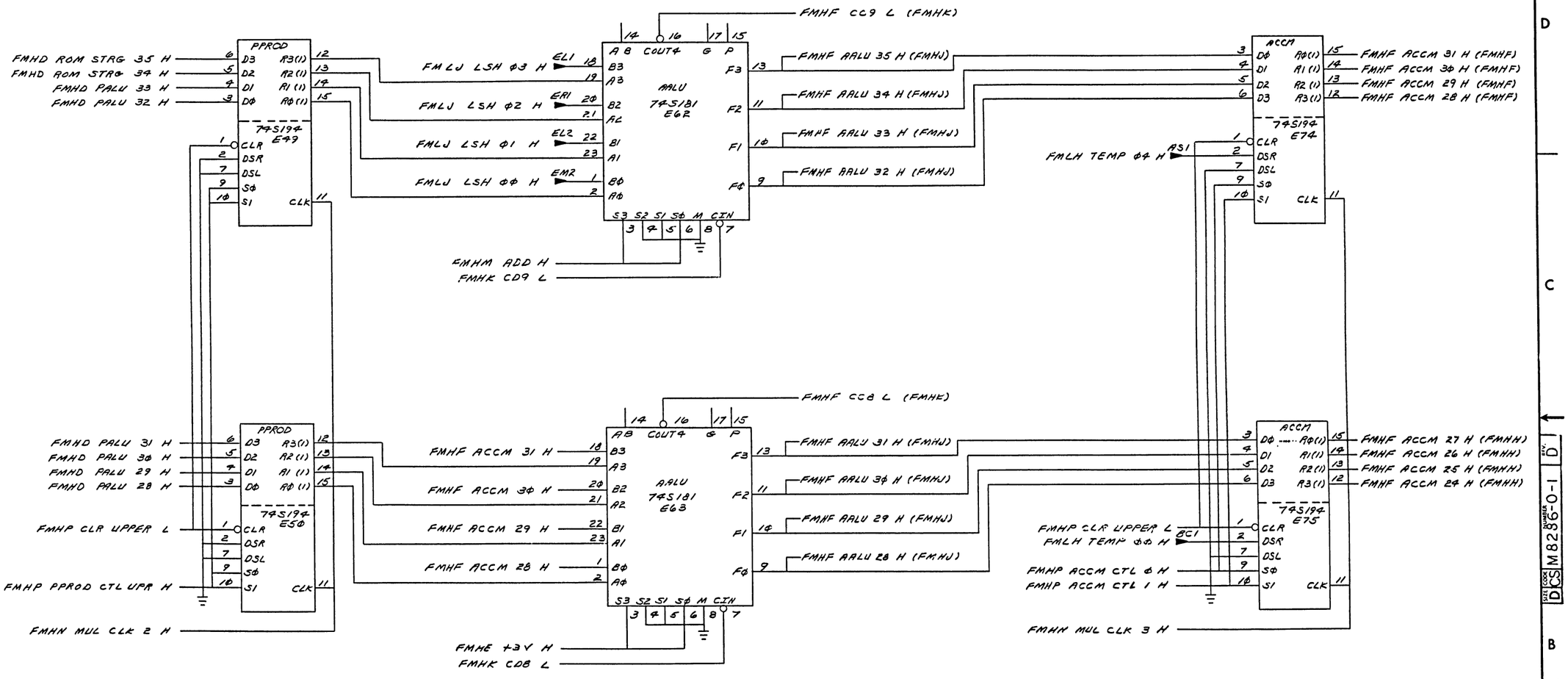

REVISIONS		
CHK	CHANGE NO.	REV.

(MULTIPLIER PIPE 3) (SLOT 25)

TITLE	SIZE	CODE	NUMBER	REV.
FRACTMUL HIGH (FMHF)	D	CS	M8286-Ø-1	D
SCALE	SHEET 7 OF 20	DIST.		

DEC FORM NO. DRD 130

TW 1

"THIS DRAWING AND SPECIFICATIONS, HEREIN, ARE THE PROPERTY OF DIGITAL EQUIPMENT CORPORATION AND SHALL NOT BE REPRODUCED OR COPIED OR USED IN WHOLE OR IN PART AS THE BASIS FOR THE MANUFACTURE OR SALE OF ITEMS WITHOUT WRITTEN PERMISSION.
COPYRIGHT ©, 1977 DIGITAL EQUIPMENT CORPORATION"

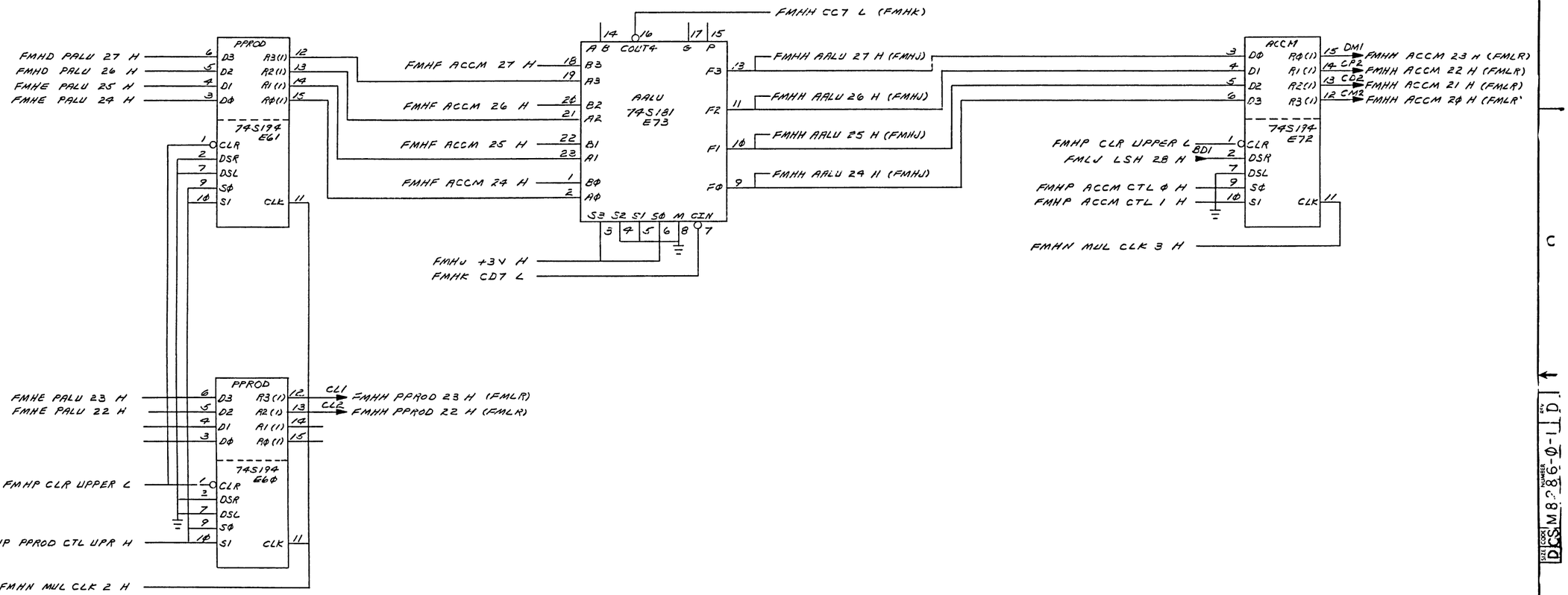

REVISIONS		
CHK	CHANGE NO.	REV.

(MULTIPLIER PIPE 4) (SLOT 25)

TITLE	SIZE	CODE	NUMBER	REV.
FRACT MUL HIGH (FMHH)	D	CS	M8286-0-1	D
SCALE	SHEET 8 OF 20	DIST.		

DEC FORM NO. DRD 130

"THIS DRAWING AND SPECIFICATIONS, HEREIN, ARE THE PROPERTY OF DIGITAL EQUIPMENT CORPORATION AND SHALL NOT BE REPRODUCED OR COPIED OR USED IN WHOLE OR IN PART AS THE BASIS FOR THE MANUFACTURE OR SALE OF ITEMS WITHOUT WRITTEN PERMISSION.
COPYRIGHT ©1977 DIGITAL EQUIPMENT CORPORATION"

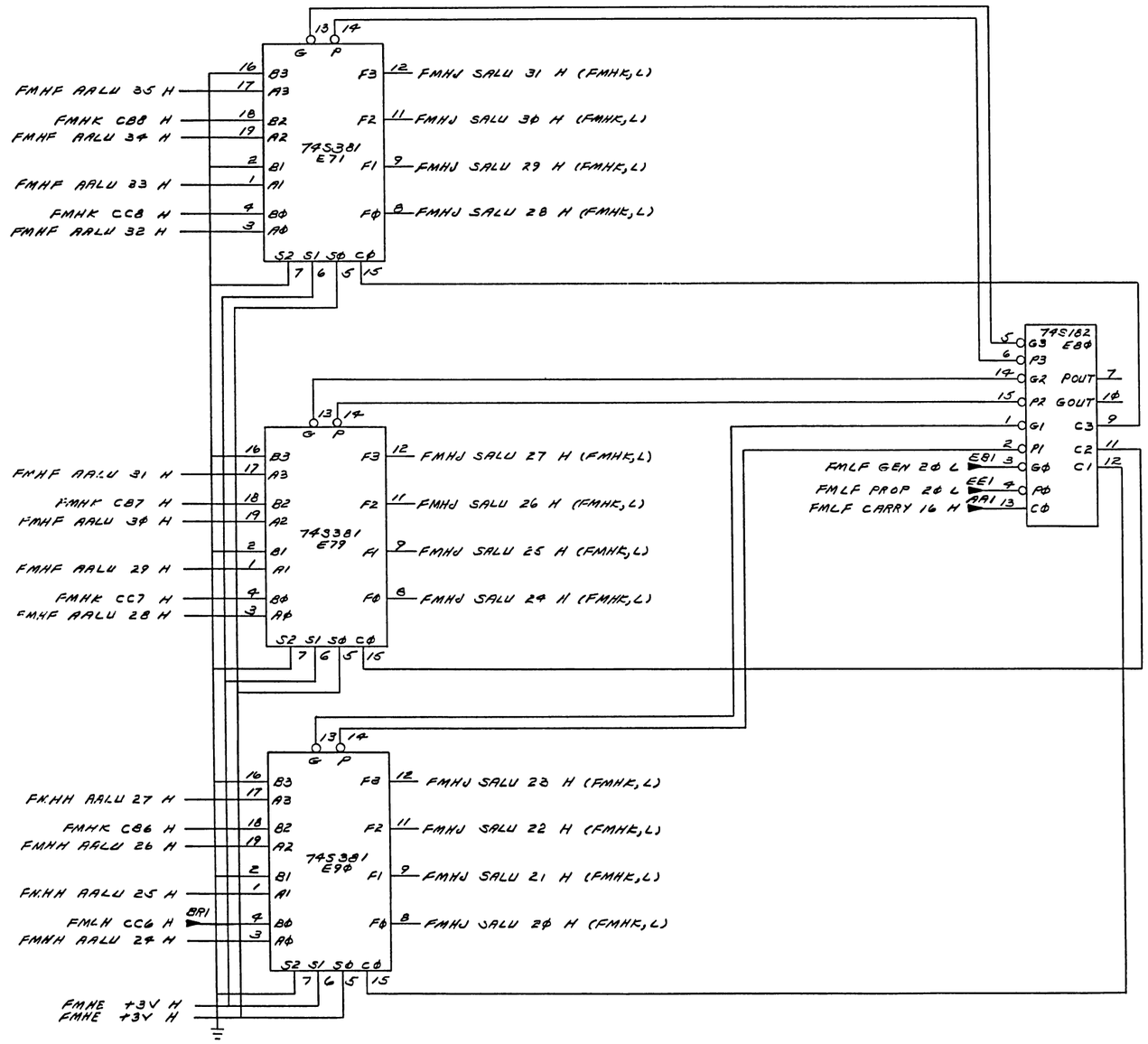

(MOST SIGNIF HALF OF ADDER) (SLOT 25)

REVISIONS		
CHK	CHANGE NO.	REV.

TITLE	SIZE	CODE	NUMBER	REV.
FRACT MUL HIGH (FMHJ)	D	CS	M8286-0-1	D
SCALE	SHEET 9 OF 20	DIST.		

DEC FORM NO. DRD 130

MARGINFACE P-1955

"THIS DRAWING AND SPECIFICATIONS, HEREIN, ARE THE PROPERTY OF DIGITAL EQUIPMENT CORPORATION AND SHALL NOT BE REPRODUCED OR COPIED OR USED IN WHOLE OR IN PART AS THE BASIS FOR THE MANUFACTURE OR SALE OF ITEMS WITHOUT WRITTEN PERMISSION.
COPYRIGHT ©, 1977 DIGITAL EQUIPMENT CORPORATION"

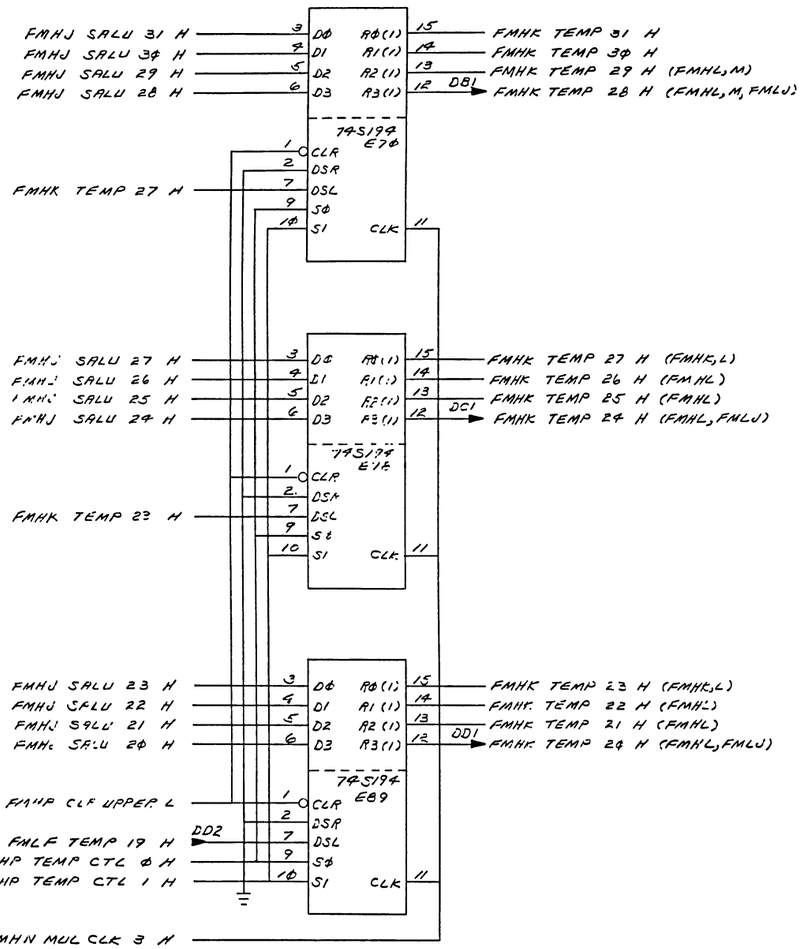

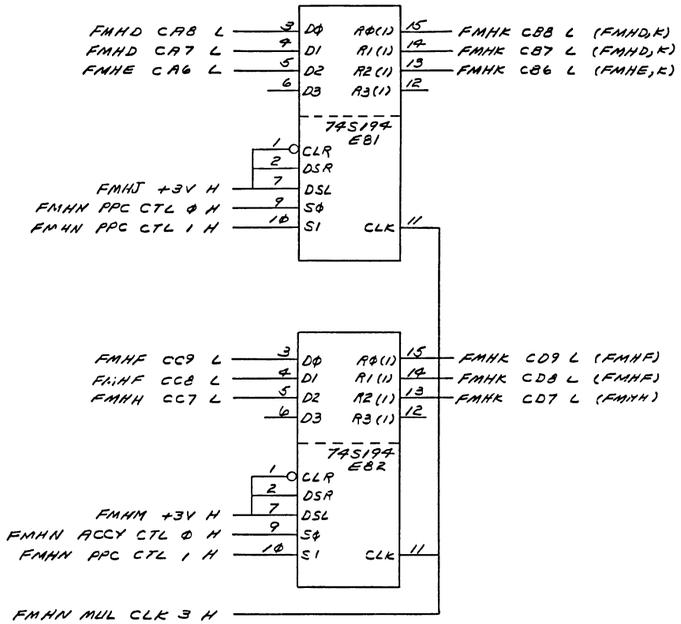

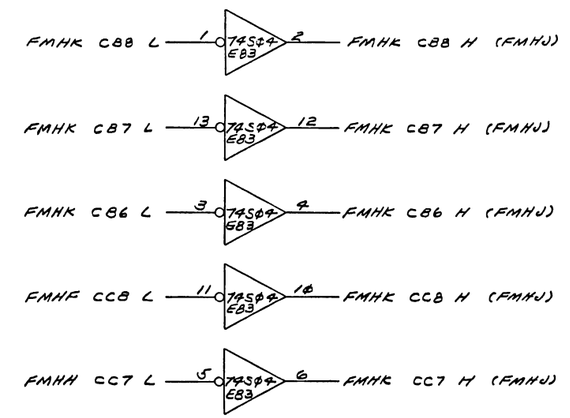

REVISIONS		
CHK	CHANGE NO.	REV.

(TEMP AND CARRY SAVE REGISTERS) (SLOT 25)

TITLE	SIZE	CODE	NUMBER	REV.
FRACT MUL HIGH (FMHK)	D	CS	M8286-0-1	D
SCALE	SHEET 10 OF 20	DIST.		

DEC FORM NO DRD 130

"THIS DRAWING AND SPECIFICATIONS, HEREIN, ARE THE PROPERTY OF DIGITAL EQUIPMENT CORPORATION AND SHALL NOT BE REPRODUCED OR COPIED OR USED IN WHOLE OR IN PART AS THE BASIS FOR THE MANUFACTURE OR SALE OF ITEMS WITHOUT WRITTEN PERMISSION.
COPYRIGHT ©, 1977 DIGITAL EQUIPMENT CORPORATION"

74S257 E68
FMHK TEMP 29 H → 13 B3
14 A3
FMHK TEMP 28 H → 3 B0
FMHJ SALU 31 H → 2 A0
FMHK TEMP 27 H → 10 B2
FMHJ SALU 30 H → 11 A2
FMHK TEMP 26 H → 6 B1
FMHJ SALU 29 H → 5 A1
S0 OUT CONT
F3 → 12 FU1 → BUS FP A 33 H
F0 → 4 FS1 → BUS FP A 32 H
F2 → 9 FR1 → BUS FP A 06 H
F1 → 7 FP1 → BUS FP A 05 H

74S257 E69
FMHK TEMP 25 H → 3 B0
FMHJ SALU 28 H → 2 A0
FMHK TEMP 24 H → 13 B3
FMHJ SALU 27 H → 14 A3
FMHK TEMP 23 H → 6 B1
FMHJ SALU 26 H → 5 A1
FMHK TEMP 22 H → 10 B2
FMHJ SALU 25 H → 11 A2
S0 OUT CONT
F0 → 4 FM1 → BUS FP A 04 H
F3 → 12 FJ1 → BUS FP A 03 H
F1 → 7 FE1 → BUS FP A 02 H
F2 → 9 FB1 → BUS FP A 01 H

FCTF DIVIDE H → DU2
FMLL EN PROD/QUOT L → DJ2
74S02 E77 (pins 5, 6, 4)

74S257 E65
FMHJ SALU 31 H → 6 B1
FMHJ SALU 23 H → 5 A1
FMHJ SALU 30 H → 10 B2
FMHJ SALU 22 H → 11 A2
FMHJ SALU 29 H → 3 B0
FMHJ SALU 21 H → 2 A0
FMHJ SALU 28 H → 13 B3
FMHJ SALU 20 H → 14 A3
S0 OUT CONT
F1 → 7 ES1 → BUS FP A 31 H
F2 → 9 EJ1 → BUS FP A 30 H
F0 → 4 EF1 → BUS FP A 29 H
F3 → 12 ED1 → BUS FP A 28 H

FMLL EN INT HI L → DH2
74S02 E77 (pins 11, 12, 13)
74S02 E77 (pins 8, 9, 10)

74S241 E67
FMHJ SALU 27 H → 8 → 12 EC1 → BUS FP A 27 H
FMHJ SALU 26 H → 4 → 16 DL1 → BUS FP A 26 H
FMHJ SALU 25 H → 6 → 14 DK1 → BUS FP A 25 H
FMHJ SALU 24 H → 2 → 18 DF1 → BUS FP A 24 H
17 → 9 EU1 → BUS FP A 00 H
19

74S241 E66
FMHJ SALU 23 H → 2 → 18 DE1 → BUS FP A 23 H
FMHJ SALU 22 H → 4 → 16 DA1 → BUS FP A 22 H
FMHJ SALU 21 H → 6 → 14 CU1 → BUS FP A 21 H
FMHJ SALU 20 H → 8 → 12 CS1 → BUS FP A 20 H
FMHK TEMP 21 H → 17 → 9 EU1 → BUS FP A 00 H
19
FMHK TEMP 20 H → 15 → 5 ES1 → BUS FP A 31 H
19

FMHM DIVIDE L → 3
74S02 E77 (pins 2, 3, 1)

(OUTPUT BUFFERS) (SLOT 25)

REVISIONS		
CHK	CHANGE NO.	REV.

TITLE	SIZE	CODE	NUMBER	REV.
FRACT MUL HIGH (FMHL)	D	CS	M8286-0-1	D
SCALE	SHEET 11 OF 20		DIST.	

SIZE D | CODE CS | NUMBER M8286-0-1 | REV. D

"THIS DRAWING AND SPECIFICATIONS, HEREIN, ARE THE PROPERTY OF DIGITAL EQUIPMENT CORPORATION AND SHALL NOT BE REPRODUCED OR COPIED OR USED IN WHOLE OR IN PART AS THE BASIS FOR THE MANUFACTURE OR SALE OF ITEMS WITHOUT WRITTEN PERMISSION.
COPYRIGHT © 1977 DIGITAL EQUIPMENT CORPORATION"

MULTIPLIER NIBBLE COUNTER

74S37 E100 → EP1 → FMHM ODD L (FMHC,D,E,K,P,FMLB,C,R)

FMHM SA 2 H (FMHC)
FMHM SA 1 H (FMHC)
FMHM SA 0 H (FMHC)
FMHM ODD H (FMHC,N)

93S16 E93 (COUT, D3 D2 D1 D0, F3 F2 F1 F0, CLR LD CLK CEP CET)
FMHM X2 C L
FMHP L H
FMHJ +3V H
FMHP LD CNTR L
FMHN NUL CLK 0 H

74S64 E105 · 74S64 E105 · 74S64 E105 · 74S02 E107

74S174 E116 (D5 D4 D3 D2 D1 D0, R5(1) R4(1) R3(1) R2(1) R1(1) R0(1), CLR CLK)
FMHM SB 2 L (FMHC)
FMHM SB 1 L (FMHC)
FMHM SB 0 L (FMHC)
FMHM SHF ZEROES H (FMHN)
FMHM C BQU 3 H (FMHN)
FMHM T0 STATE H (FMHN,R)
FMHN CPT175 H
FMHJ +3V H
FMHR T100 STATE H

74S138 E128 (SEL C SEL B SEL A, D0 D1 D2 D3 D4 D5 D6 D7)
FMHM EVEN L
EN

74S64 E105

74S175 E138 (D3 D2 D1 D0, R3(0) R3(1) R2(0) R2(1) R1(0) R1(1) R0(1) R0(0), CLR CLK)
FMHM EVEN H (FMHP)
FMHM EVEN L (FMHM,P)
FMHP ALU ADD N L
FMHM ADD H (FMHF)
FMHP FLAG N L
FMHM FLAG H (FMHM,N,P)
FMHM FLAG L (FMHM,N,P)
FMHM D3 H
FMHM D4 H (FMHM,N)
FMHM D4 L (FMHN)
FMHJ +3V H

74S64 E105 · 74S64 E105

74S374 E91 (D7 D6 D5 D4 D3 D2 D1 D0, R7 R6 R5 R4 R3 R2 R1 R0, CLK TSE)
FMHM D7 L
FMHM D5 H
FMHM D4 H
FMHM D2 H
FMHM D1 H
FMHM D8 L (FMHN)
FMHM D7 L (FMHM,N)
FMHM D5 H (FMHM)
FMHM D3 H (FMHM,N,P)
FMHM D2 H (FMHM)
FMHM D1 H (FMHM,N)

74S64 E105

74S175 E115 PRESENT STATE (D3 D2 D1 D0, R3(1) R3(0) R2(1) R2(0) R1(1) R1(0) R0(1) R0(0), CLK CLR)
FMHM X3 N H
FMHM X2 N H
FMHM X1 N H
FMHM X0 N H
FMHM X3 S H (FMHM,N)
FMHM X3 S L (FMHM,N)
FMHM X2 S H (FMHM,N)
FMHM X2 S L (FMHM,N)
FMHM X1 S H (FMHM,N)
FMHM X1 S L (FMHM,N)
FMHM X0 S H (FMHM,N)
FMHM X0 S L (FMHM,N)
FMHN MPINIT L

74S175 E127 (D3 D2 D1 D0, R3(1) R3(0) R2(1) R2(0) R1(1) R1(0) R0(1) R0(0), CLK CLR)
FMHM X3 C H (FMHP,R)
FMHM X3 C L (FMHN,P,R)
FMHM X2 C H (FMHN,P,R)
FMHM X2 C L (FMHM,P,R)
FMHM X1 C H (FMHN,P)
FMHM X1 C L (FMHP,R)
FMHM X0 C H (FMHN,P,R)
FMHM X0 C L (FMHN,P,R)
FMHN MUL CLK 1 H
FMHJ +3V H

FMHM FLAG H · FCTF DOUBLE H → FD1 · 74S10 E114 → FMHM X3 S H · FMHM X0 S L
FMHM X3 S L · FMHN X2 S H · 74S10 E114 → FMHM X1 S H · FMHM X0 S H · FMHM D4 H · FMHM FLAG L

74S64 E113 → FCTK MCOUNT L (BT2) → 74S51 E97 → FMHM X3 N H (FMHM,P)

FMHM DIVIDE L · FMHM INTEGER L · FMHM DOUBLE L → 74S10 E124 → FMHM X2 S L · FMHM X0 S H → 74S10 E114

FMHK TEMP 29 H · FMHR T100 STATE H → 74S51 E111 → FMHM DIV DN L

FMHM X2 S L · FMHM X3 S H · FMHM X1 S L · FMHM X3 S L · FMHM X0 S H · FMHM X2 S H · FMHM X0 S L → 74S51 E111 → FMHM X2 N H (FMHM,P)
FCTK MCOUNT L (BT2)

IRCF OPC 7 H (GH2) → 74S04 E101 → FMHM INTEGER L (FMHM,P) → 74S04 E101 → FMHM INTEGER H (FMHM,P)
FCTF DOUBLE H (FD1) → 74S04 E101 → FMHM DOUBLE L (FMHM,P)
FCTF DIVIDE H (DV2) → 74S04 E101 → FMHM DIVIDE L (FMHL,M)
FCTF DIVIDE H (DV2) · FMHP +3V H · FMHM X2 S H · FMHM X1 S H → 74S02 E107

(MULTIPLIER SEQUENCER) (SLOT 25)

REVISIONS

CHK	CHANGE NO.	REV.

TITLE	SIZE	CODE	NUMBER	REV.
FRACT MUL HIGH (FMHM)	D	CS	M8286-0-1	D
SCALE	SHEET 12 OF 20	DIST.		

SIZE D | CODE CS | NUMBER M8286-0-1 | REV. D

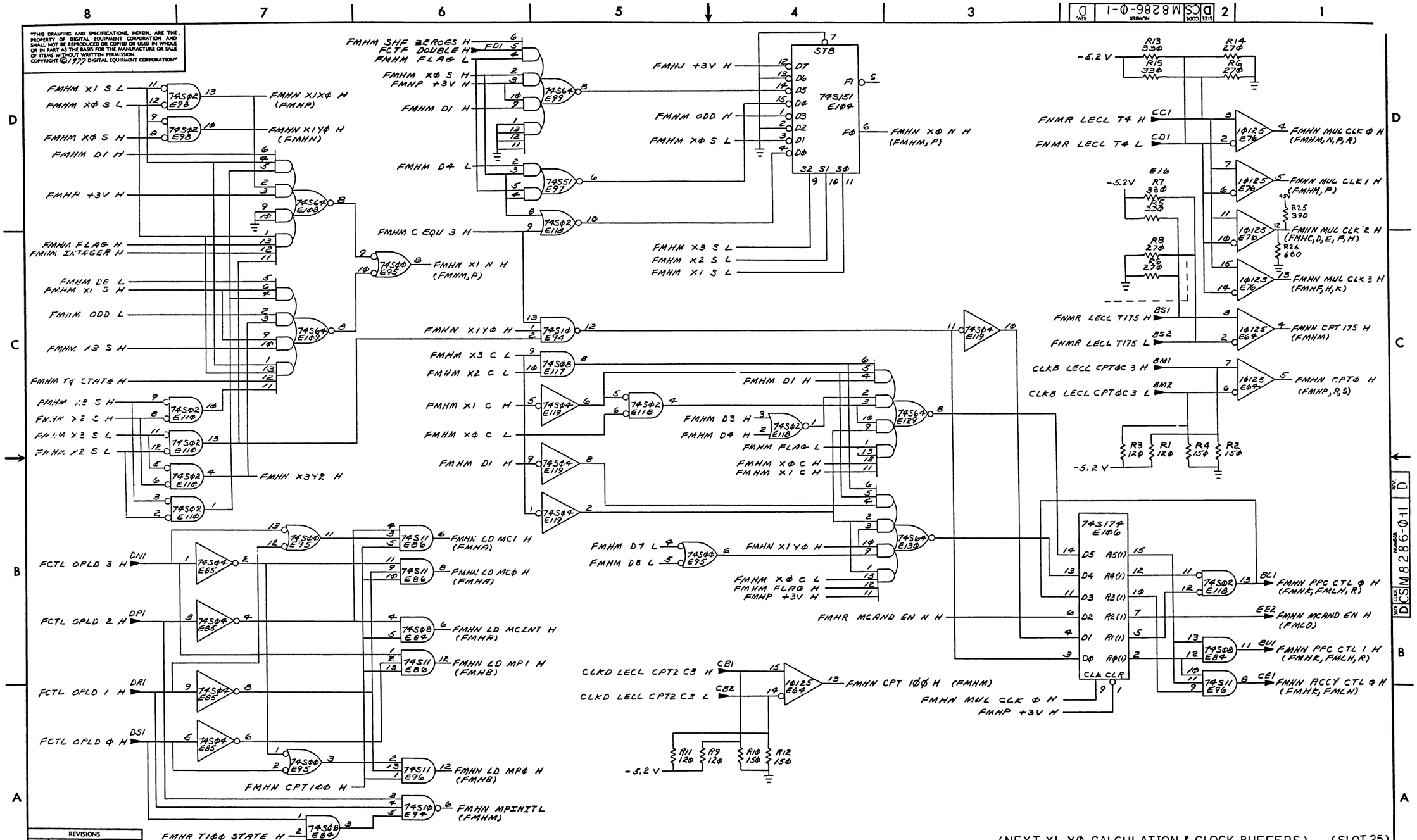

(NEXT X1,XØ CALCULATION & CLOCK BUFFERS) (SLOT 25)

TITLE	SIZE	CODE	NUMBER	REV.
FRACT MUL HIGH (FMHN)	D	CS	M8286-Ø-1	D

SCALE — SHEET 13 OF 20 DIST.

REVISIONS

CHK	CHANGE NO.	REV.

"THIS DRAWING AND SPECIFICATIONS, HEREIN, ARE THE PROPERTY OF DIGITAL EQUIPMENT CORPORATION AND SHALL NOT BE REPRODUCED OR COPIED OR USED IN WHOLE OR IN PART AS THE BASIS FOR THE MANUFACTURE OR SALE OF ITEMS WITHOUT WRITTEN PERMISSION. COPYRIGHT © 1977 DIGITAL EQUIPMENT CORPORATION"

"THIS DRAWING AND SPECIFICATIONS, HEREIN, ARE THE PROPERTY OF DIGITAL EQUIPMENT CORPORATION AND SHALL NOT BE REPRODUCED OR COPIED OR USED IN WHOLE OR IN PART AS THE BASIS FOR THE MANUFACTURE OR SALE OF ITEMS WITHOUT WRITTEN PERMISSION.
COPYRIGHT ©1977 DIGITAL EQUIPMENT CORPORATION"

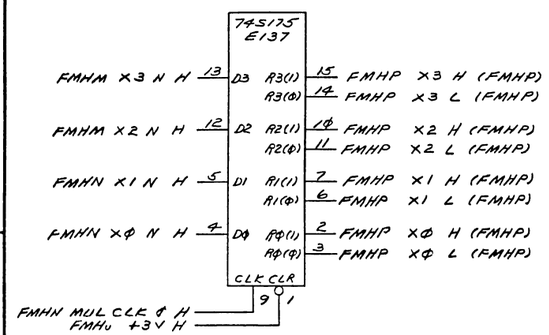

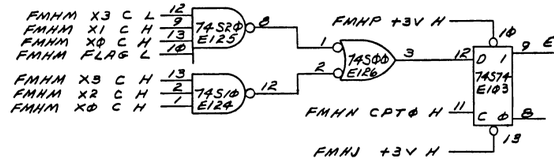

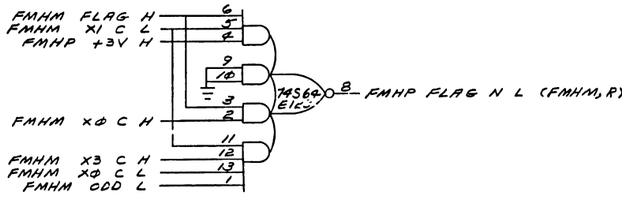

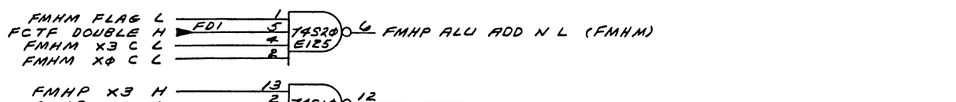

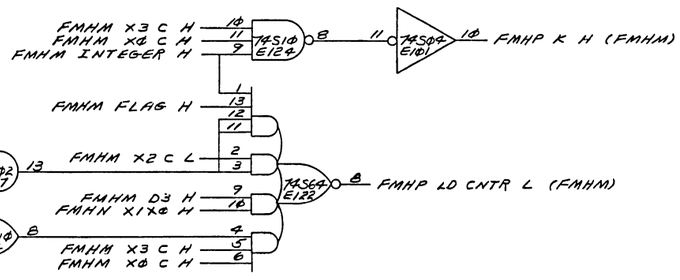

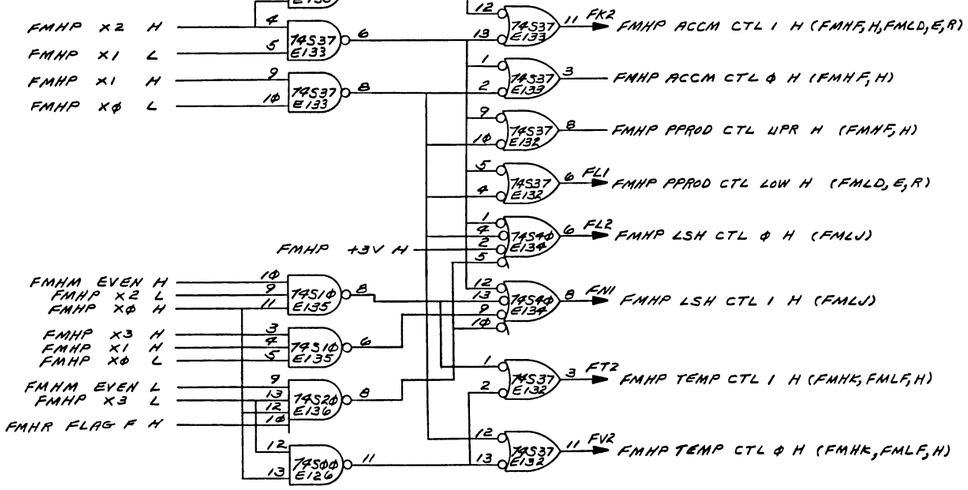

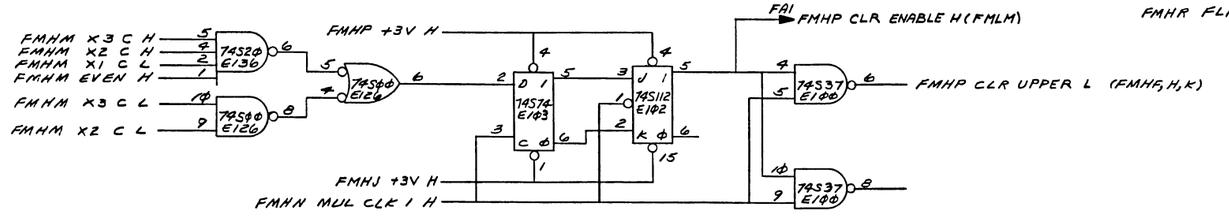

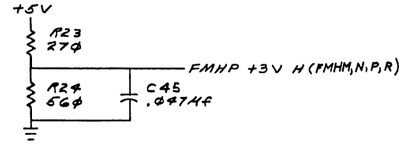

REVISIONS		
CHK	CHANGE NO.	REV.

(CONTROL SIGNAL DERIVATION (SLOT 25)

TITLE	SIZE	CODE	NUMBER	REV.
FRACT MUL HIGH (FMHP)	D	CS	M8286-Ø-1	D
SCALE	SHEET 14 OF 20	DIST.		

M8286-Ø-1 REV D

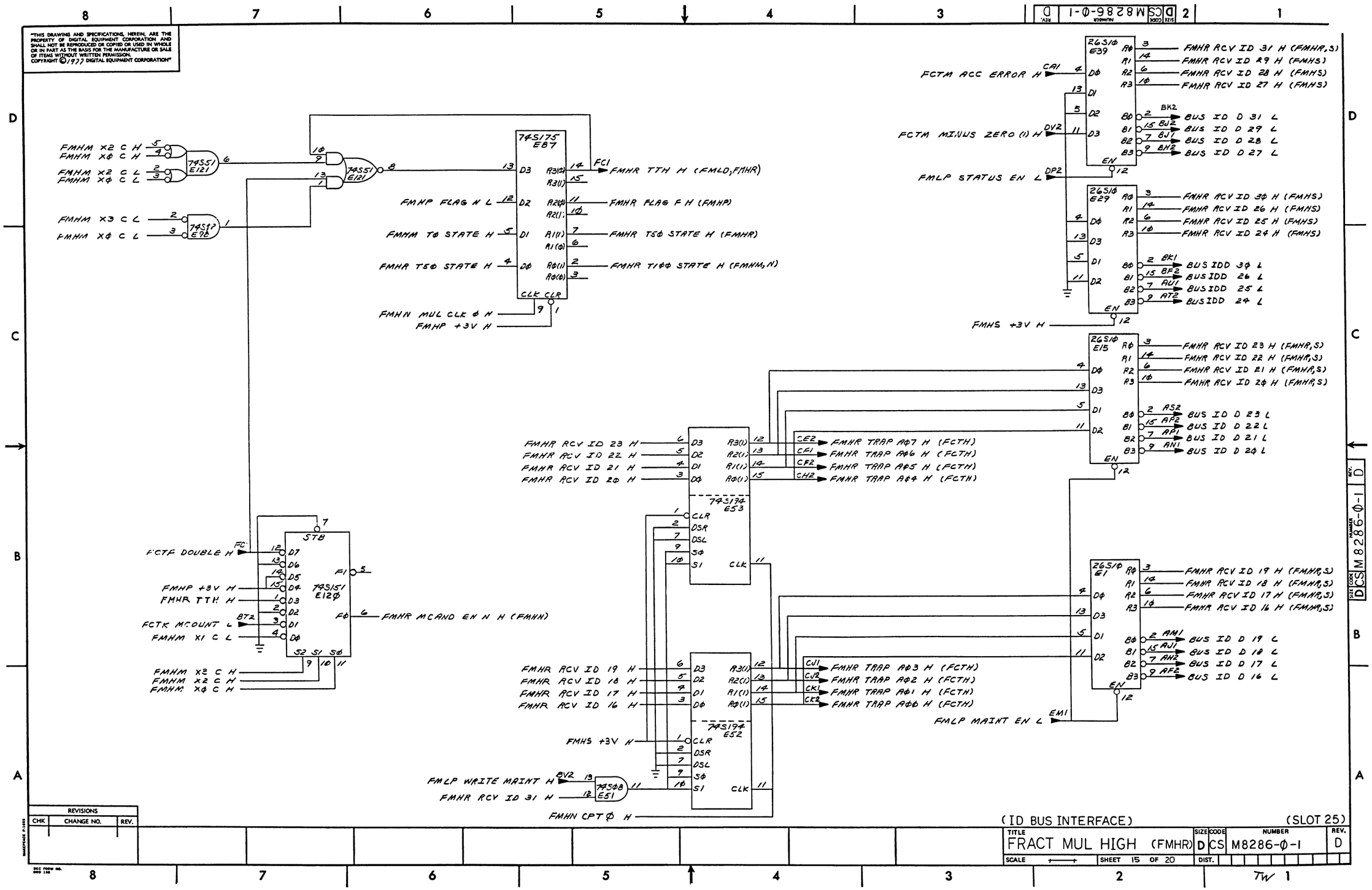

"THIS DRAWING AND SPECIFICATIONS, HEREIN, ARE THE PROPERTY OF DIGITAL EQUIPMENT CORPORATION AND SHALL NOT BE REPRODUCED OR COPIED OR USED IN WHOLE OR IN PART AS THE BASIS FOR THE MANUFACTURE OR SALE OF ITEMS WITHOUT WRITTEN PERMISSION. COPYRIGHT © 1977 DIGITAL EQUIPMENT CORPORATION"
74S51 E121
74S175 E87
74S151 E120
74S194 E53
74S194 E52
74S08 E51
26S10 E39
26S10 E29
26S10 E15
26S10 E1
FMHM X2 C H
FMHM XØ C H
FMHM X2 C L
FMHM XØ C L
FMHM X3 C L
FMHM XØ C L
FMHP FLAG N L
FMHM TØ STATE H
FMHR TSØ STATE H
FMHN MUL CLK Ø H
FMHP +3V H
FMHR TTH H (FMLD,FMHR)
FMHR FLAG F H (FMHP)
FMHR TSØ STATE H (FMHR)
FMHR TIØØ STATE H (FMHM,N)
FCTM ACC ERROR H
FCTM MINUS ZERO (1) H
FMLP STATUS EN L
FMHS +3V H
FMHR RCV ID 31 H (FMHR,S)
FMHR RCV ID 29 H (FMHS)
FMHR RCV ID 28 H (FMHS)
FMHR RCV ID 27 H (FMHS)
BUS ID D 31 L
BUS ID D 29 L
BUS ID D 28 L
BUS ID D 27 L
FMHR RCV ID 3Ø H (FMHS)
FMHR RCV ID 26 H (FMHS)
FMHR RCV ID 25 H (FMHS)
FMHR RCV ID 24 H (FMHS)
BUS IDD 3Ø L
BUS IDD 26 L
BUS IDD 25 L
BUS IDD 24 L
FMHR RCV ID 23 H (FMHR,S)
FMHR RCV ID 22 H (FMHR,S)
FMHR RCV ID 21 H (FMHR,S)
FMHR RCV ID 2Ø H (FMHR,S)
BUS ID D 23 L
BUS ID D 22 L
BUS ID D 21 L
BUS ID D 2Ø L
FMHR RCV ID 23 H
FMHR RCV ID 22 H
FMHR RCV ID 21 H
FMHR RCV ID 2Ø H
FMHR TRAP AØ7 H (FCTH)
FMHR TRAP AØ6 H (FCTH)
FMHR TRAP AØ5 H (FCTH)
FMHR TRAP AØ4 H (FCTH)
FCTF DOUBLE H
FMHP +3V H
FMHR TTH H
FCTK MCOUNT L
FMHM X1 C L
FMHR MCAND EN N H (FMHN)
FMHM X3 C H
FMHM X2 C H
FMHM XØ C H
FMHR RCV ID 19 H
FMHR RCV ID 18 H
FMHR RCV ID 17 H
FMHR RCV ID 16 H
FMHR TRAP AØ3 H (FCTH)
FMHR TRAP AØ2 H (FCTH)
FMHR TRAP AØ1 H (FCTH)
FMHR TRAP AØØ H (FCTH)
FMLP MAINT EN L
FMHR RCV ID 19 H (FMHR,S)
FMHR RCV ID 18 H (FMHR,S)
FMHR RCV ID 17 H (FMHR,S)
FMHR RCV ID 16 H (FMHR,S)
BUS ID D 19 L
BUS ID D 18 L
BUS ID D 17 L
BUS ID D 16 L
FMHS +3V H
FMLP WRITE MAINT H
FMHR RCV ID 31 H
FMHN CPTØ H
(ID BUS INTERFACE)
(SLOT 25)
REVISIONS
CHK
CHANGE NO.
REV.
TITLE
FRACT MUL HIGH (FMHR)
SIZE D
CODE CS
NUMBER M8286-Ø-1
REV. D
SCALE
SHEET 15 OF 20
DIST.
TW

"THIS DRAWING AND SPECIFICATIONS, HEREIN, ARE THE PROPERTY OF DIGITAL EQUIPMENT CORPORATION AND SHALL NOT BE REPRODUCED OR COPIED OR USED IN WHOLE OR IN PART AS THE BASIS FOR THE MANUFACTURE OR SALE OF ITEMS WITHOUT WRITTEN PERMISSION.
COPYRIGHT ©1977 DIGITAL EQUIPMENT CORPORATION"

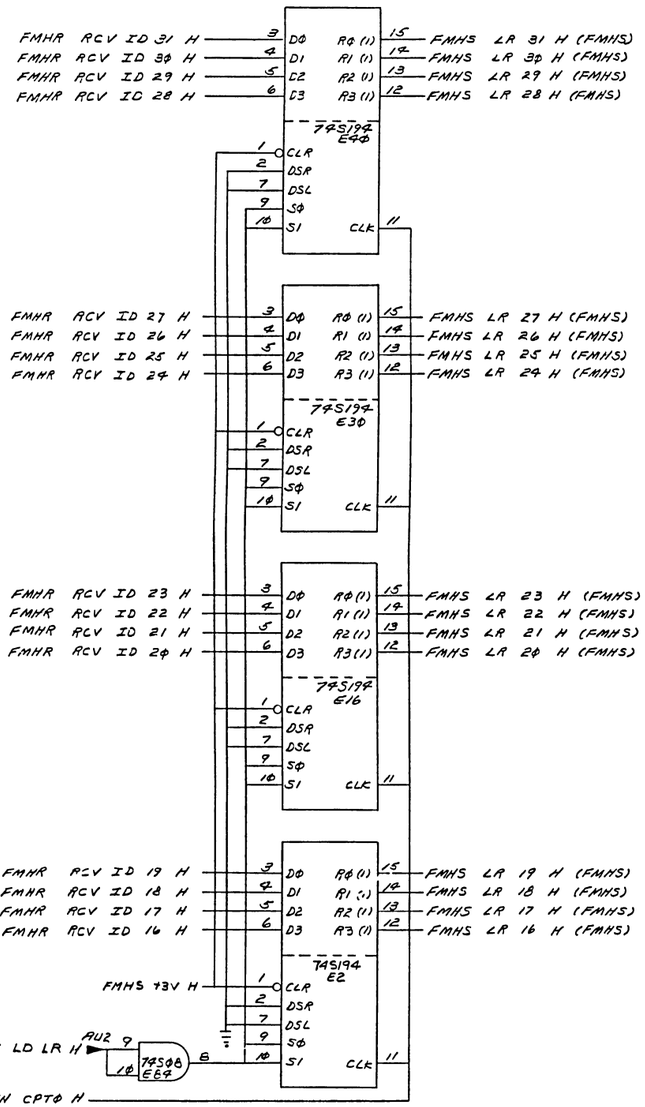

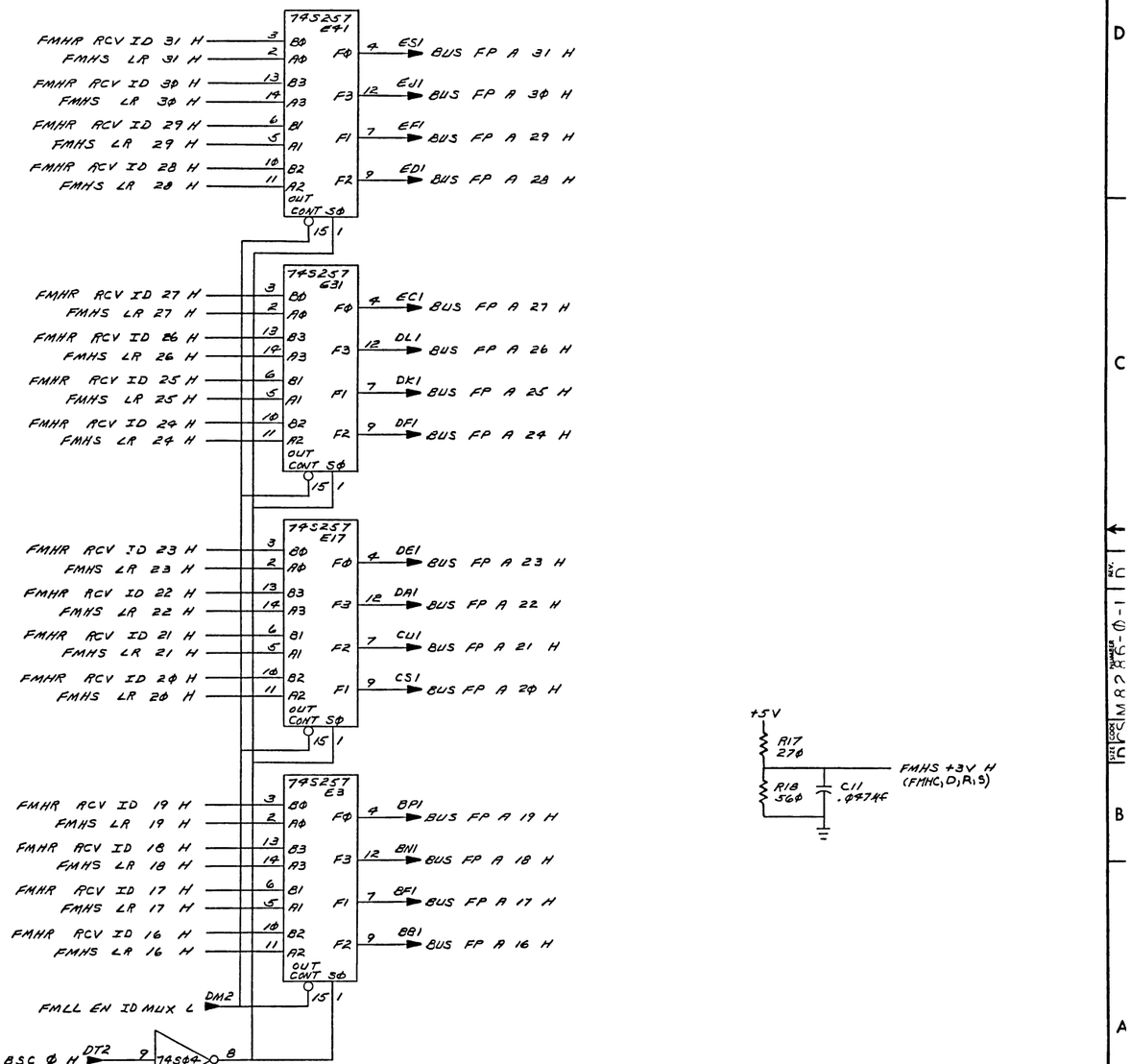

(LITERAL REGISTER) (SLOT 25)

REVISIONS		
CHK	CHANGE NO.	REV.

TITLE	SIZE	CODE	NUMBER	REV.
FRACT MUL HIGH (FMHS)	D	CS	M8286-0-1	D
SCALE ⟷	SHEET 16 OF 20		DIST.	

DEC FORM NO. DRD 130

"THIS DRAWING AND SPECIFICATIONS, HEREIN, ARE THE PROPERTY OF DIGITAL EQUIPMENT CORPORATION AND SHALL NOT BE REPRODUCED OR COPIED OR USED IN WHOLE OR IN PART AS THE BASIS FOR THE MANUFACTURE OR SALE OF ITEMS WITHOUT WRITTEN PERMISSION.
COPYRIGHT © 1977 DIGITAL EQUIPMENT CORPORATION"

MULTIPLICAND REGISTERS ENABLED		
OPCODE	TTH	REGISTER
MULF, (POLYF)	X	MC1, MCX
MULD, (POLYD)	1	MCØ, MCX
MULD, (POLYD)	Ø	MC1, MC1L
MULL	X	MC INT, MCX
EMODF	X	MC1, MCX
EMODD	1	MCØ, MCX
EMODD	Ø	MC1, MC1L

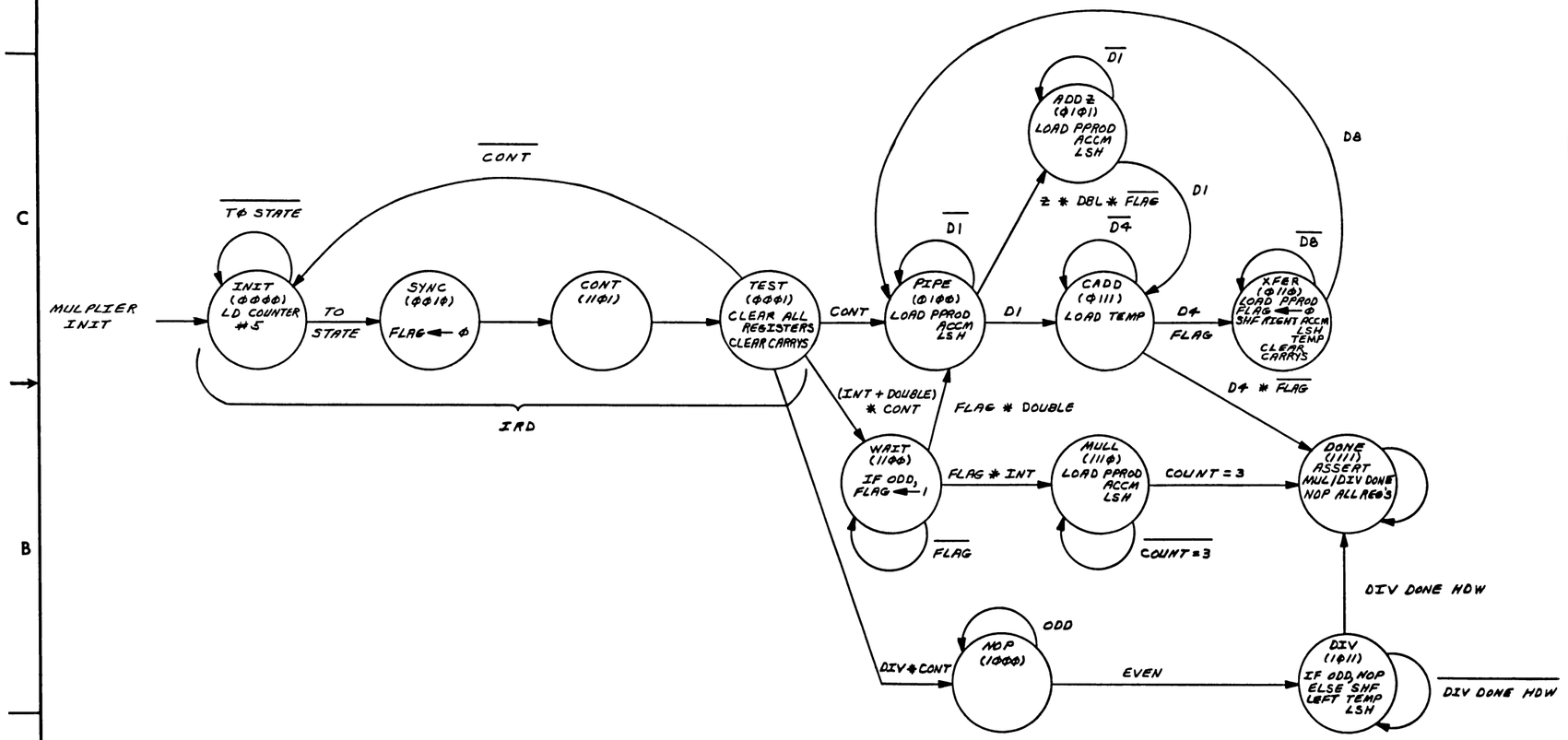

(SLOT 25)

(MULTIPLIER CONTROL STATE TRANSITION DIAGRAM)

REVISIONS		
CHK	CHANGE NO.	REV.

TITLE	SIZE	CODE	NUMBER	REV.
FRACT MUL HIGH (FMHT)	D	CS	M8286-Ø-1	D
SCALE ←→	SHEET 17 OF 20	DIST.		

"THIS DRAWING AND SPECIFICATIONS, HEREIN, ARE THE PROPERTY OF DIGITAL EQUIPMENT CORPORATION AND SHALL NOT BE REPRODUCED OR COPIED OR USED IN WHOLE OR IN PART AS THE BASIS FOR THE MANUFACTURE OR SALE OF ITEMS WITHOUT WRITTEN PERMISSION.
COPYRIGHT ©1977 DIGITAL EQUIPMENT CORPORATION"

* DON'T CARE STATE

STATE VARIABLES				NAME	NEXT STATE	DEFINITION	OUTPUT CONTROL									
X3	X2	X1	XØ				LD CNTR	CNTR CONSTANT	NEXT TTH	NEXT ALU ADD	NEXT FLAG	NEXT CLR ALL	MUL/DIV DONE	PPRMD	ACCM	LSH	TEMP
Ø	Ø	Ø	Ø	INIT	IF $\overline{T\emptyset}$, THEN ØØØØ; ELSE ØØ1Ø	RESULT OF MINIT SIGNAL FROM MICROCODE. PREPARES MPLIER NIBBLE SELECT COUNTER FOR MULF SEQUENCE.	1	1Ø1Ø	Ø *	1 IF $\overline{\text{FLAG}}$ AND DOUBLE *	PREV FLAG *	1	Ø	NOP *	NOP *	NOP *	NOP *
Ø	Ø	1	Ø	SYNC	11 Ø1	ENTRY FROM STATE ØØØØ AT TSØ TO PROVIDE SYNCRONIZATION BETWEEN MULTIPLIERS 5Ø ns. CLOCK AND MICROCODES 2ØØ ns. CLOCK.	Ø	1Ø1Ø *	Ø	1 IF $\overline{\text{FLAG}}$ AND DOUBLE *	Ø	1	Ø	LD *	SR *	SR *	SR *
1	1	Ø	1	CONT	ØØØ1	NOP IF MULF OR EMODF; LOAD MPLIER NIBBLE SELECT COUNTER IF MUL, MULD, OR EMODD.	1 IF DOUBLE OR INT	Ø11Ø IF INT ELSE ØØ1Ø	1 IF DOUBLE ELSE Ø	Ø *	PREV FLAG	Ø	1 *	LD *	LD *	NOP *	NOP *
Ø	Ø	Ø	1	TEST	IF $\overline{\text{CONT.}}$, THEN ØØØØ ELSE IF DIV, THEN 1ØØØ; ELSE IF DBL. OR INT. , 11ØØ; ELSE Ø1ØØ	TESTS OPCODE FOR FIRST EXECUTION STATE CALCULATION; CLEARS THE MULTIPLIER DATA PATH,	Ø	1Ø1Ø *	PREV TTH	Ø *	PREV FLAG	1	Ø	NOP *	NOP *	SL IF EVEN LD IF EVEN AND FLAG	LD *
1	Ø	Ø	Ø	NOP	IF $\overline{\text{EVEN}}$ THEN 1ØØØ; ELSE 1Ø11	WAITS FOR FIRST QUOTIENT BIT TO BE FORMED IN THE NALU.	1 *	1Ø1Ø	Ø *	Ø	PREV FLAG	Ø	Ø	NOP	NOP	NOP	NOP
1	Ø	1	1	DIV	IF $\overline{\text{DIV DONE}}$, THEN 1Ø11; ELSE 1111	SHIFTS LSH AND TEMP LEFT ONE BIT TO ACCEPT QUOTIENT BITS IN DIVIDE	1 IF D3 AND DBL OR INT *	1110 IF INT ELSE 1Ø1Ø	1 IF DOUBLE ELSE PREV TTH	Ø	PREV FLAG *	Ø	Ø	NOP *	NOP *	SL IF EVEN	SL IF EVEN
1	1	Ø	Ø	WAIT	IF $\overline{\text{FLAG}}$, THEN 11ØØ ELSE IF DBL, THEN Ø1ØØ; ELSE 111Ø	CLEAR DATA PATH AND CARRY REGISTERS FOR MULD, EMODD, AND MULL. WAITS FOR FIRST ROM LOOK UP.	1 IF INT AND FLAG	ØØ1Ø	PREV TTH	Ø	1 IF EVEN ELSE PREV FLAG *	1 IF EVEN	Ø	LD	LD	LD	NOP *
1	1	1	Ø	MULL	IF $\overline{\text{COUNT}}$ = 3, THEN 111Ø ELSE 1111	RUNS MULTIPLIER PIPE FOR MULL.	Ø	ØØ1Ø *	PREV TTH *	Ø	Ø	Ø	Ø	LD	LD	LD	SR *
Ø	1	Ø	Ø	PIPE	IF SHF ZEROES, AND DBL. AND $\overline{\text{FLAG}}$ THEN Ø1Ø1 ELSE IF D1, THEN Ø111; ELSE Ø1ØØ	RUNS MULTIPLER PIPE FOR FLOATING POINT MULTIPLY OPERATIONS. ADDS LSH'S 4 LSB'S TO ACCM'S 4 MSB'S IF SECOND TIME THROUGH DBL MULTIPLY.	1 IF INT AND FLAG	ØØ1Ø *	PREV TTH	1 IF $\overline{\text{FLAG}}$ AND DOUBLE	PREV FLAG	Ø	Ø	LD	LD	LD	NOP *
Ø	1	1	1	CADD	IF $\overline{\text{D4}}$, THEN Ø111 ELSE IF FLAG, THEN Ø11Ø ELSE 1111	STOPS PIPE TO ADD FINAL STORED, CARRYS TO FINAL ACCUMULATION. LOADS TEMP.	1 IF D3	ØØ1Ø	Ø	Ø	PREV FLAG	Ø	1 IF $\overline{\text{FLAG}}$	NOP	NOP	LD IF EVEN AND FLAG	LD
Ø	1	1	Ø	XFER	IF $\overline{\text{D8}}$, THEN Ø11Ø ELSE Ø1ØØ	SHIFTS ACCM, TEMP, AND LSH RIGHT TO TRANSFER.	Ø	ØØ1Ø *	PREV TTH	1 IF DOUBLE	Ø	Ø	Ø	LD	SR	SR	SR
Ø	1	Ø	1	ADDZ	IF $\overline{\text{D1}}$, THEN Ø1Ø1 ELSE Ø111	ADDS ZEROES TO ACCM'S 4 MSB'S.	Ø	ØØ1Ø	Ø	Ø	PREV FLAG	Ø	Ø	LD	LD	LD	LD *
1	1	1	1	DONE	1111	STOPS ALL REGISTERS FROM CHANGING TO ALLOW NR OR CPU D REG. TO ACCEPT FINAL RESULT.	1 IF D3 AND DOUBLE OR INT *	Ø11Ø IF INT ELSE ØØ1Ø	1 IF DOUBLE *	Ø	PREV FLAG	Ø	1	NOP	NOP	NOP	NOP

REVISIONS		
CHK	CHANGE NO.	REV.

(MULTIPLIER CONTROL SIGNALS) (SLOT 25)

TITLE	SIZE	CODE	NUMBER	REV.
FRACT MUL HIGH (FMHU)	D	CS	M8286-Ø-1	D
SCALE	SHEET 18 OF 20	DIST.		

"THIS DRAWING AND SPECIFICATIONS, HEREIN, ARE THE PROPERTY OF DIGITAL EQUIPMENT CORPORATION AND SHALL NOT BE REPRODUCED OR COPIED OR USED IN WHOLE OR IN PART AS THE BASIS FOR THE MANUFACTURE OR SALE OF ITEMS WITHOUT WRITTEN PERMISSION.
COPYRIGHT © , DIGITAL EQUIPMENT CORPORATION"

MULF TIMING

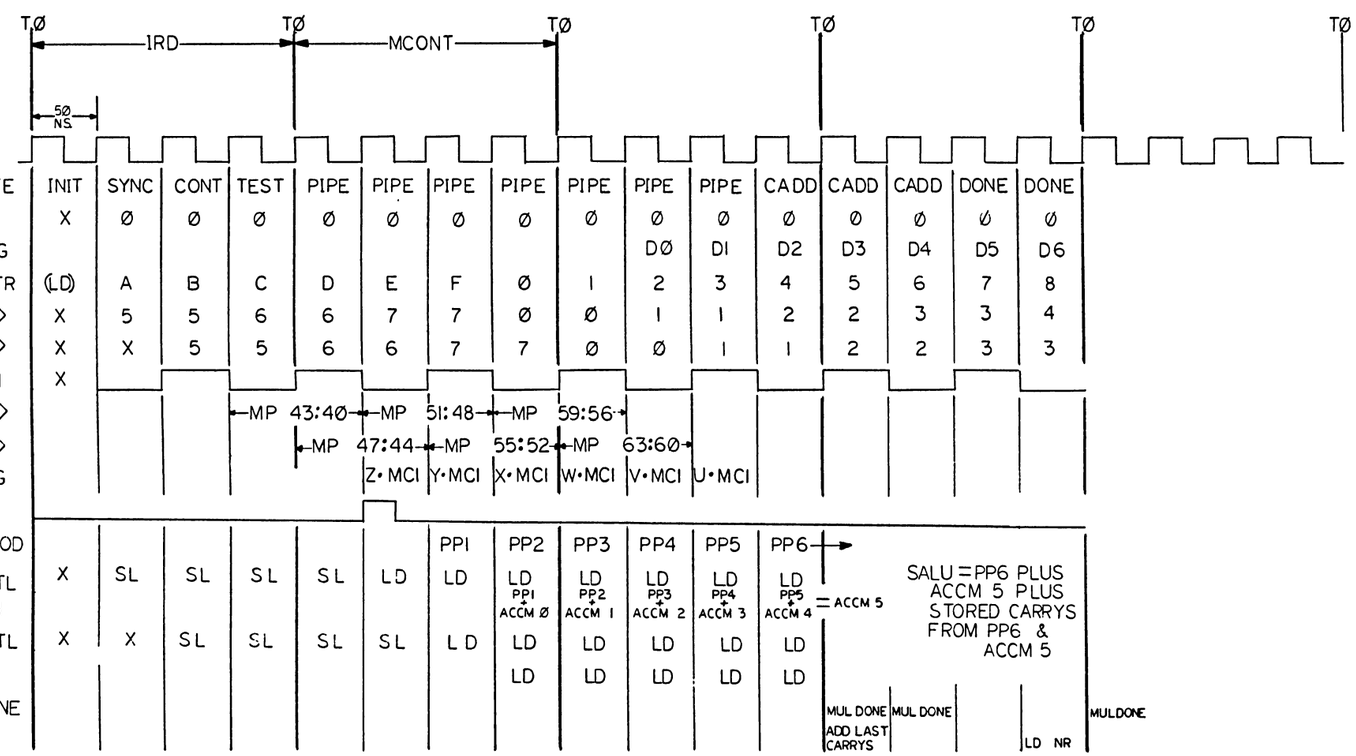

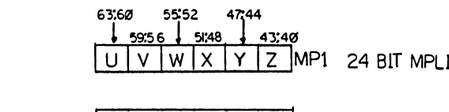

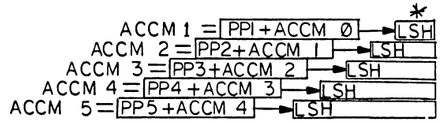

* AFTER EACH ADDITION OF THE PARTIAL PRODUCT AND ACCUMULATOR CONTENTS, THE 4 LEAST SIGNIFICANT BITS OF THE RESULT ARE LOADED INTO THE LSH REGISTER.

MULL TIMING

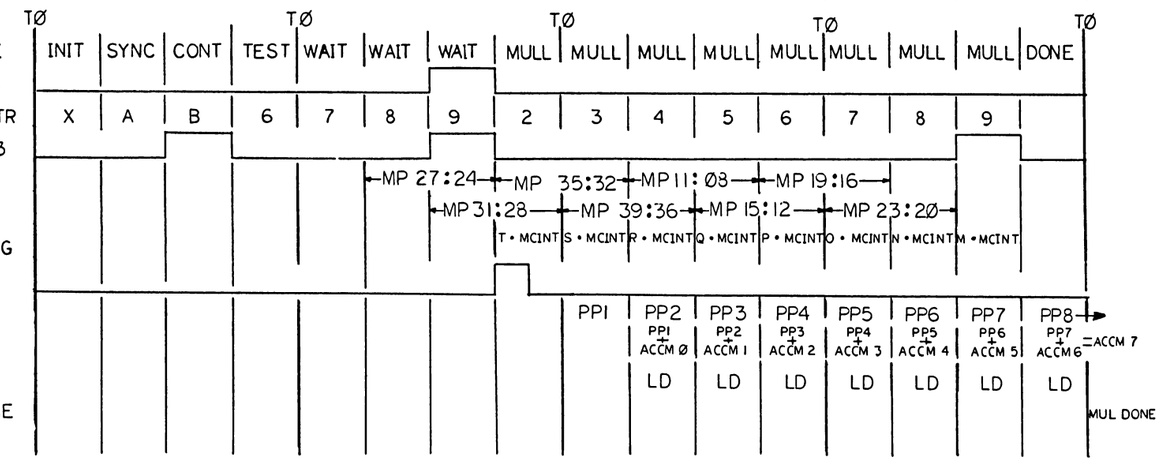

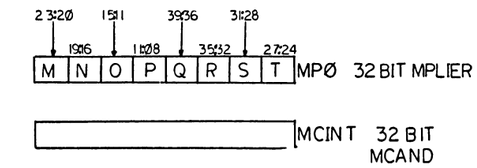

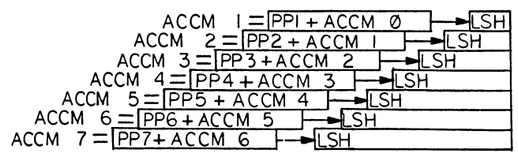

SALU = PP8 PLUS ACCM 7 PLUS STORED CARRYS FROM PP6 & ACCM 7

REVISIONS			
REV.	CHANGE NO.	CHK.	

DRN. R LENNON	3-NOV-77	FIRST USED ON: VAX STAR
CHK'D FERGUSON	19-NOV-77	
ENG. S. LACKEY	19-NOV-77	TITLE: MULF, MULL TIMING DIAGRAM
PROJ. ENG S. LACKEY	19-NOV-77	
PROD. G. LEE	21-NOV-77	
NEXT HIGHER ASSY.		
SCALE	1/1	SIZE D, CODE CS, NUMBER M8286-Ø-1, REV. D
SHEET 19 OF 20		DIST.

M8286-Ø-1 REV. D

"THIS DRAWING AND SPECIFICATIONS, HEREIN, ARE THE PROPERTY OF DIGITAL EQUIPMENT CORPORATION AND SHALL NOT BE REPRODUCED OR COPIED OR USED IN WHOLE OR IN PART AS THE BASIS FOR THE MANUFACTURE OR SALE OF ITEMS WITHOUT WRITTEN PERMISSION.
COPYRIGHT © DIGITAL EQUIPMENT CORPORATION"

MULD TIMING

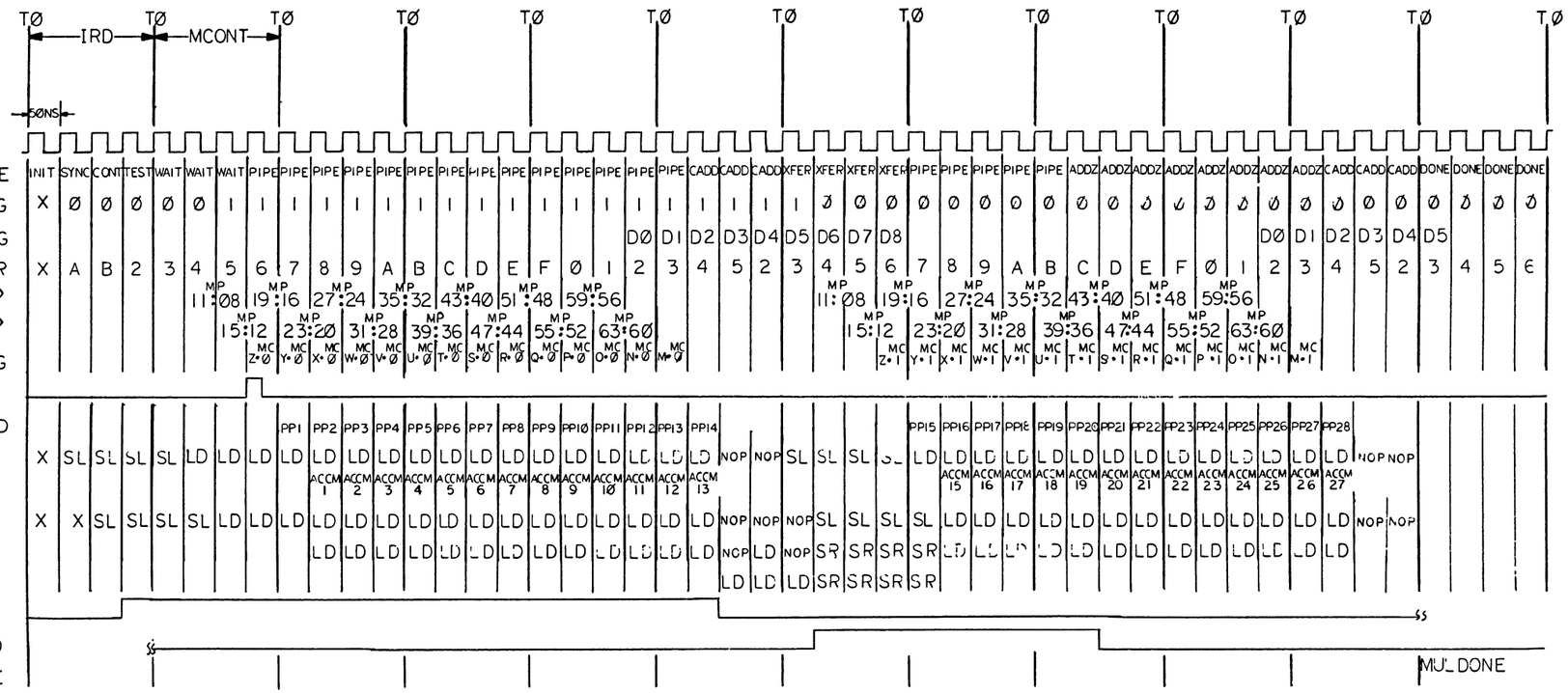

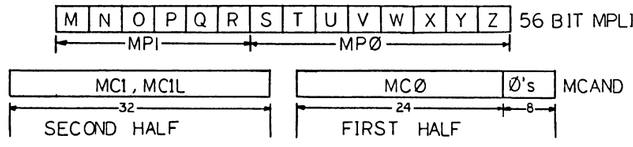

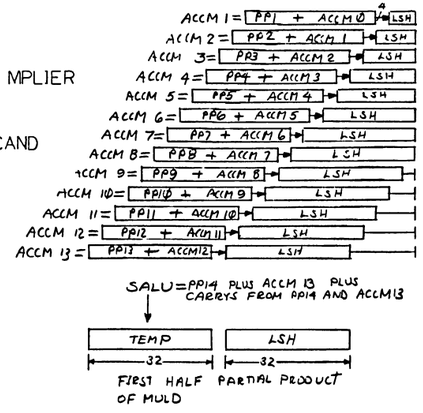

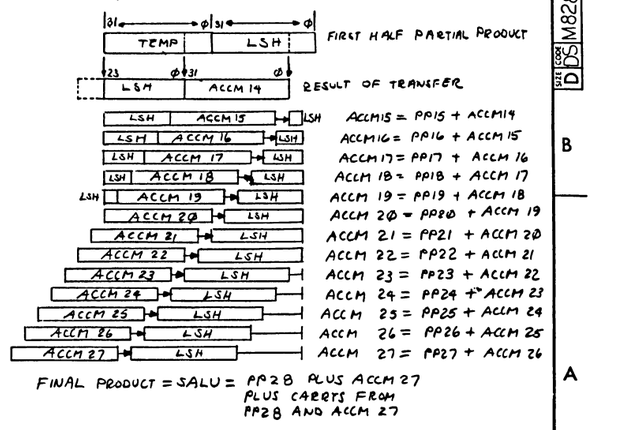

REVISIONS		
CHK	CHANGE NO.	REV.

TITLE	SIZE	CODE	NUMBER	REV.
MULD TIMING DIAGRAM	D	CS	M8286-Ø-1	D
SCALE	SHEET 2Ø OF 2Ø	DIST.		

TW 1

COMPONENT SIDE VIEW

3-1

SIGNATURES	DATE
DRN	2-82
CHK D.F. Cook	
ENG J.M.C. for R.L. Hall	2-82
ENG J.M.C. for R.L. Hall	2-82
PROJ Art Simon for R.L. Hall	2-82
SCALE 2/1	SIZE E
SHT 1 OF 4	

digital

TITLE FRACTION MULTIPLY LOW

SITECODE E UA NUMBER M8287-0-0 REV C

NEXT ASSY MOS-KB MOS-KB-DD-M8287-0

ETCH REV.

P.C. M8334 DATA BASE REV.

B-P1 B-P2

CHANGE NO REV
M8287AW001 C
CHANGE MATRIX

NOTES:

E UA M8287-0-0 C

THIS DRAWING AND SPECIFICATIONS, HEREIN, ARE THE PROPERTY OF DIGITAL EQUIPMENT CORPORATION AND SHALL NOT BE REPRODUCED OR COPIED OR USED IN WHOLE OR IN PART AS THE BASIS FOR MANUFACTURE OR SALE OF ITEMS WITHOUT WRITTEN PERMISSION.
COPYRIGHT © 1978 DIGITAL EQUIPMENT CORPORATION

LAYER 1

L1

M8287 5013091B-P1

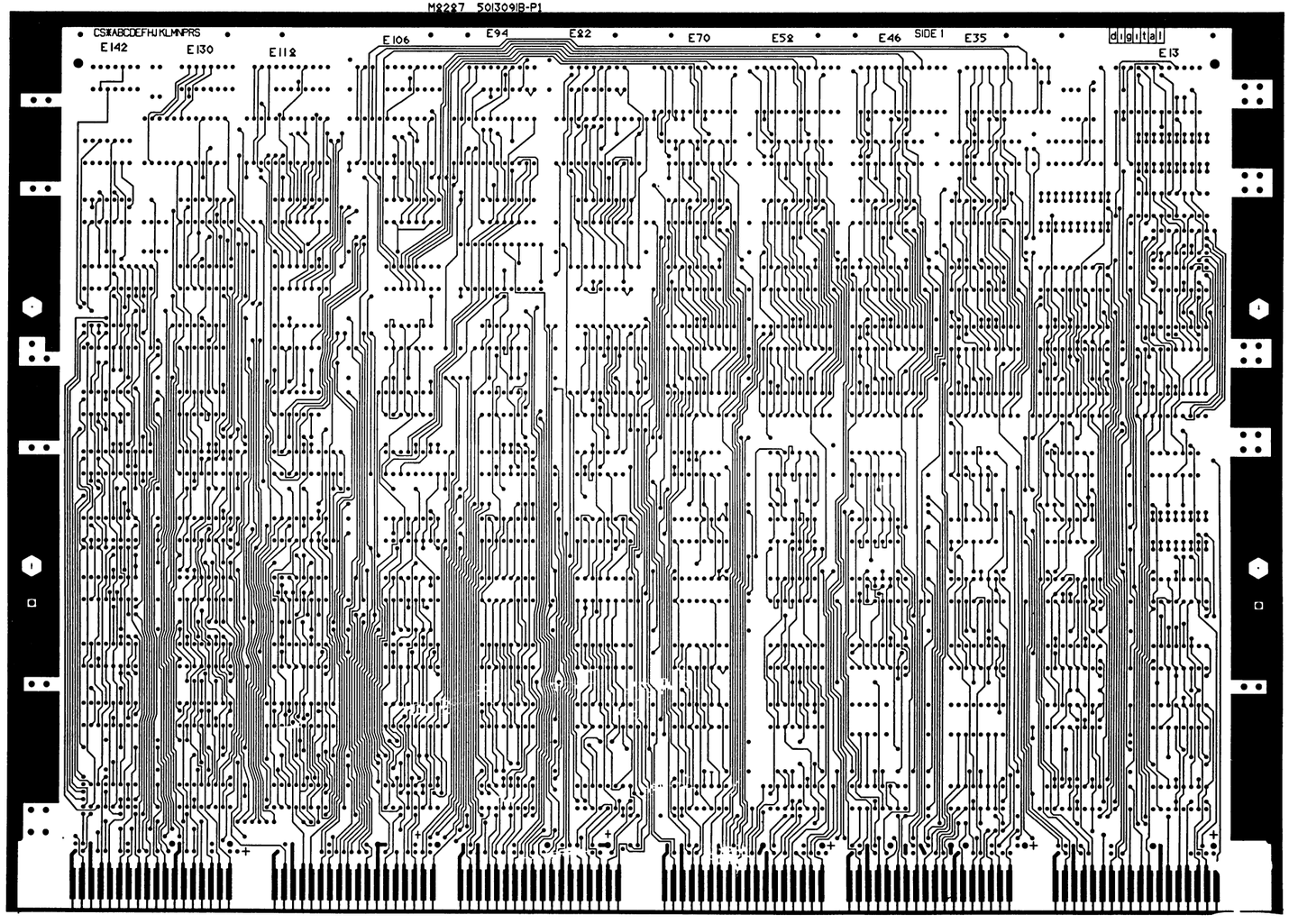

REVISIONS		
DWR	CHANGE NO.	REV

TITLE FRACTION MULTIPLY LOW		SIZE/CODE E	NUMBER UA M8287 - 0 - 0	REV. C
SCALE 2 -	SHEET 2 OF 4	DIST.		

"THIS DRAWING AND SPECIFICATIONS, HEREIN, ARE THE PROPERTY OF DIGITAL EQUIPMENT CORPORATION AND SHALL NOT BE REPRODUCED OR COPIED OR USED IN WHOLE OR IN PART AS THE BASIS FOR MANUFACTURE OR SALE OF ITEMS WITHOUT WRITTEN PERMISSION.
COPYRIGHT © 1979 DIGITAL EQUIPMENT CORPORATION"

L4

LAYER 4

FML M2227 5013091B-P1

SIDE 2

REVISIONS		
CHK	CHANGE NO.	REV.

TITLE	SIZE	CODE	NUMBER	REV.
FRACTION MULTIPLY LOW	E	UA	M8287-0-0	C

SCALE 2-1 SHEET 3 OF 4 SHEETS

M8287-0-0 REV C

"THIS DRAWING AND SPECIFICATIONS, HEREIN, ARE THE PROPERTY OF DIGITAL EQUIPMENT CORPORATION AND SHALL NOT BE REPRODUCED OR COPIED OR USED IN WHOLE OR IN PART AS THE BASIS FOR THE MANUFACTURE OR SALE OF ITEMS WITHOUT WRITTEN PERMISSION.
COPYRIGHT © 1979, DIGITAL EQUIPMENT CORPORATION"

REWORK INSTRUCTIONS

ECO #3
WIRE ADDS SIDE 1:
3-1 FROM E92-1Ø TO E8Ø-1Ø

REVISIONS		
CHK	CHANGE NO.	REV

TITLE	SIZE	CODE	NUMBER	REV.
FRACTION MULTIPLY LOW	E	UA	M8287-0-0	C
SCALE	SHEET 4 OF 4	DIST.		

LINE	ITEM	DOCUMENT NUMBER	PART NUMBER		DESCRIPTION	QTY PER VARIATION 00	REFERENCE DESIGNATOR
1	1	D-MD-5013091-0-0	5013091-00		FML	1	
2	2		1012084-01		8 MFD 25V G% 30D AL EL	7	C1-C7
3	3		1012784-00		.047 MFD 50V -20+80 CER	53	C8-C60
4	4		1300247-00		120 1/4W 5% CC	4	R2,R4,R6,R8
5	5		1300250-00		150 1/4W 5% CC	4	R1,R3,R5,R7
6	6		1301972-00		270 1/4W 5% CC	4	R9,R11,R13,R15
7	7		1300295-00		330 1/4W 5% CC	2	R10,R12
8	8		1301890-00		560 1/4W 5% CC	2	R14,R16
9	9		1910532-00		74S00 NAND GATE-QUAD 2IN$	3	E19,E102,E125
10	10		1910534-00		74S04 INVERTER GATE-HEX 1I	6	E51,E76,E89,E126,E140,E141
11	11		1912389-00		74S08 AND GATE-QUAD 2IN,PO	4	E6,E64,E113,E137
12	12		1910536-00		74S10 NAND GATE-TRIPLE 3IN	3	E40,E50,E101
13	13		1910537-00		74S11 AND GATE-TRIPLE 3INP	2	E52,E114
14	14		1910539-00		74S20 NAND GATE-DUAL 4INPU	4	E28,E29,E39,E90
15	15		1912746-00	DEC	74S37 NAND GATE-QUAD 2IN	2	E18,E142
16	16		1910548-00		74S157 MUX 1 OF 2 (QUAD)	10	E9,E10,E32,E33,E43,E44,E55,E56,
						CONT	E67,E68
17	17		1910531-00	DEC	74S181 ALU-4BIT	11	E13,E35,E46,E58,E70,E81,E91,E93,
						CONT	E105,E117,E129
18	18		1912097-00	SN	74S182 LOOK AHD CARRY GEN	1	E88
19	19		1910552-00		74S194 SHIFT REG.,4BIT RIGH	36	E3,E16,E24,E26,E37,E49,E61,E67,
						CONT	E73,E74,E79,E80,E82,E85,E86,
						CONT	E92,E94,E97,E99,E103,E104,E106,
						CONT	E109,E111,E115,E116,E118,E121,
						CONT	E123,E127,E128,E130,E133,E135,
						CONT	E138
20	20		1913493-00		74S241 OCTAL BUFFER,TRI-STA	1	E108
21	21		1911641-00	SN	74S257 MUX,QUAD 2 TO 1	23	E1,E2,E4,E14,E15,E17,E27,E38,
						CONT	E48,E60,E72,E84,E95,E96,E98,
						CONT	E107,E110,E119,E120,E122,E131,

REVISION HISTORY			BASIC PART NO: M8287											
ENG	ECO NUMBER	REV	SECTION A OF A	DRN: F SMART	DATE: 19-OCT-77		D	I	G	I	T	A	L
---	INITIAL	C	SECTION,VARIATION INDEX	CHK'D: F SMART	DATE: 19-OCT-77	TITLE PARTS LIST							
			[A] 00			FRACTION MULITPLY LOW							
			[B]										
			[C]	DES.ENG: S LACKEY	DATE: 21-OCT-77								
			[D]										
			[E]			DOCUMENT NUMBER							
			[F]	RESP.ENG.: S LACKEY	DATE: 21-OCT-77								
			[H]			SIZE	CODE	NUMBER		REV			
			[J]										
			[K]	MFG.ENG.: M TERELLA	DATE: 21-OCT-77	K	PL	M8287-0-DRP		C			
			[L]										
			[M]	ASSEMBLY NUMBER:	TOP DOCUMENT NUMBER:			FILE NAME:		EDIT #			
			[N]	D-UA-M8287-0-0				M8287.PLS		4			

"THIS DRAWING AND SPECIFICATIONS HEREIN, ARE THE PROPERTY OF DIGITAL EQUIPMENT CORPORATION AND SHALL NOT BE REPRODUCED OR COPIED OR USED IN WHOLE OR IN PART AS THE BASIS FOR THE MANUFACTURE OR SALE OF ITEMS WITHOUT WRITTEN PERMISSION.
COPYRIGHT (C) 1979, DIGITAL EQUIPMENT CORPORATION "

LINE	ITEM	DOCUMENT NUMBER	PART NUMBER	DESCRIPTION	QTY PER VARIATION 00	REFERENCE DESIGNATOR
						CONT E132,E134
22	22		23012B1-00	B1-01 OR CUSTOM MASKED ROM (74S2	10	E7,E8,E30,E31,E41,E42,E53,E54,
						CONT E65,E66
23	23		1913670-00	74S373 LATCH 8BIT TRASP TR	5	E20-E22,E77,E78
24	24		1913671-00	74S374 DF-D OCTAL TRISTATE	5	E11,E34,E45,E57,E69
25	25		1913700-00	74S381 ALU-4BIT	5	E100,E112,E124,E136,E139
26	26		1912828-00	LS85 COMPARATOR,4BIT MAGN	2	E75,E87
27	27		1911415-00	10125 ECL TO TTL TRNSLTR	2	E25,E36
28	28		1913788-00	26S10 TRANSCEIVER,BUS,QUA	4	E47,E59,E71,E83
29	29		1210711-02	HANDLE,MODULE,EX	1	
30	30		9000024-01	EYELET, ROLLED FLANGE, .121 OD X	12	
31	31		9105740-55	WIRE(WRAP)30AWG UL1423	A/R	
32	32		1300309-00	390 1/4W 5% CC	1	R17
33	33		1301424-00	680 1/4W 5% CC	1	R18

Ø NOTE: I,C, SPARE LOCATIONS ARE E5,E12,E23

D	I	G	I	T	A	L	TITLE	SECTION A OF A
							FRACTION MULITPLY LOW	

SIZE	CODE	DOCUMENT NUMBER	REV
K	PL	46287-0-DRP	C

"THIS DRAWING AND SPECIFICATIONS, HEREIN, ARE THE PROPERTY OF DIGITAL EQUIPMENT CORPORATION AND SHALL NOT BE REPRODUCED OR COPIED OR USED IN WHOLE OR IN PART AS THE BASIS FOR THE MANUFACTURE OR SALE OF ITEMS WITHOUT WRITTEN PERMISSION.
COPYRIGHT © 1977 DIGITAL EQUIPMENT CORPORATION"

FML-CPU SIGNAL NAME TRANSLATION TABLE

SIGNAL NAME	C.S. PAGE USED ON
ICLJ ID LEFT ADRS Ø H	FMLP
ICLJ ID LEFT WRITE L	FMLP

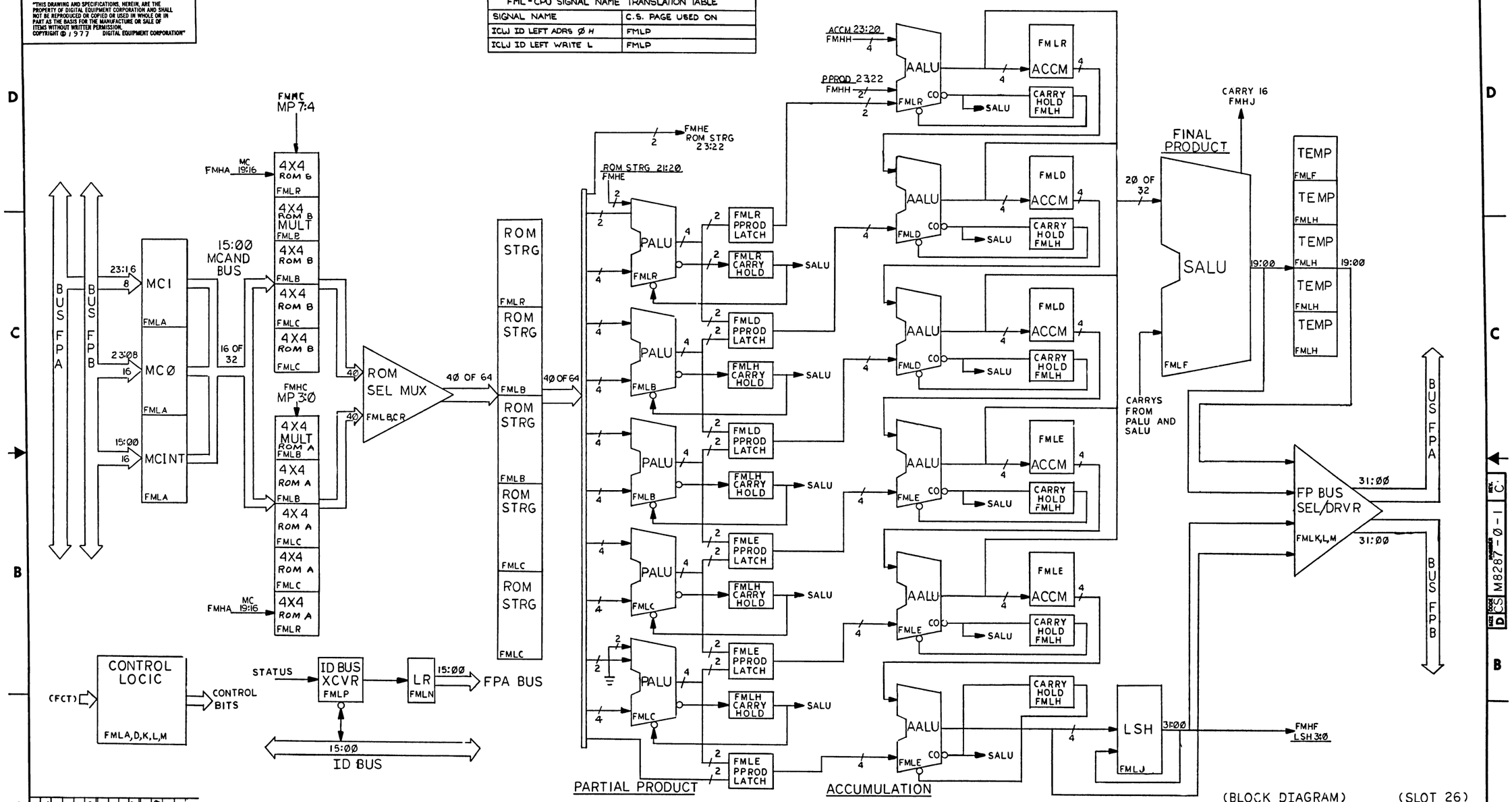

(BLOCK DIAGRAM) (SLOT 26)

DRN. J. Vincent	9-22-77	FIRST USED ON FP78Ø
CHK'D	10-19-77	digital
ENG.	10-19-77	TITLE FRACT MUL LOW (FML)
PROJ. ENG.	10-19-77	
PROD.	10-21-77	
NEXT HIGHER ASSY. B-DD-M8287-0-0		SIZE D CODE CS NUMBER M8287-Ø-1 REV. C
SCALE		
SHEET 1 OF 15		DIST.

REVISIONS

CHK	CHANGE NO.	REV.
P.J.	M8287-00001	A
D. Zuncker	24 JAN 78	
A. HELENIUS		
P.J.	M8287-00002	B
P. Jones	16 MAR 78	
S. LACKEY		
M8287-TW003		C
D. Chiesa	9 May 79	
S. LACKEY		
	7-31-79	

"THIS DRAWING AND SPECIFICATIONS, HEREIN, ARE THE PROPERTY OF DIGITAL EQUIPMENT CORPORATION AND SHALL NOT BE REPRODUCED OR COPIED OR USED IN WHOLE OR IN PART AS THE BASIS FOR THE MANUFACTURE OR SALE OF ITEMS WITHOUT WRITTEN PERMISSION.
COPYRIGHT © 1977 DIGITAL EQUIPMENT CORPORATION"

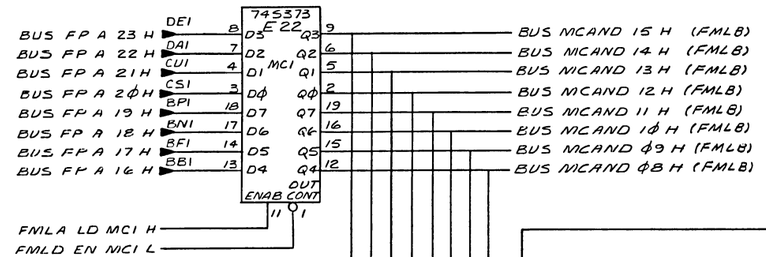

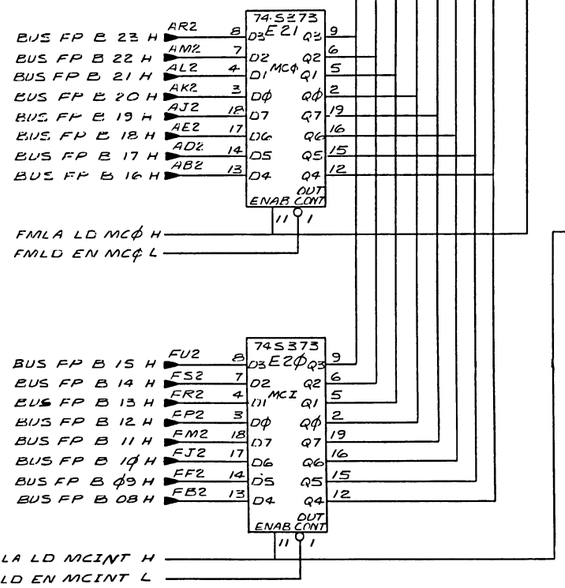

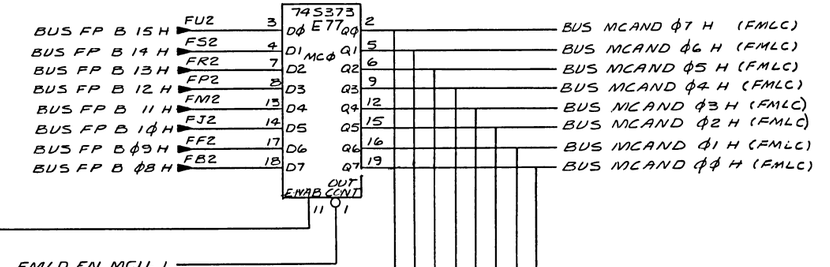

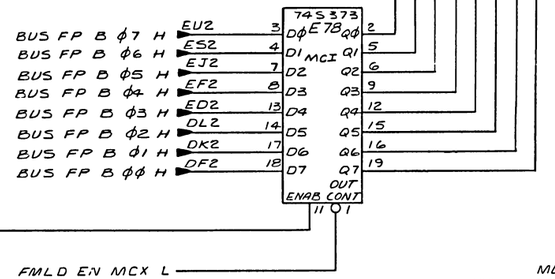

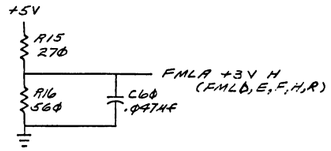

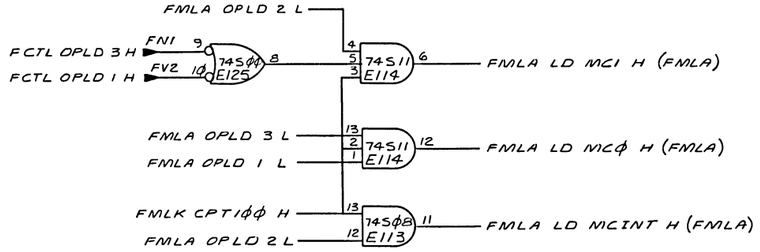

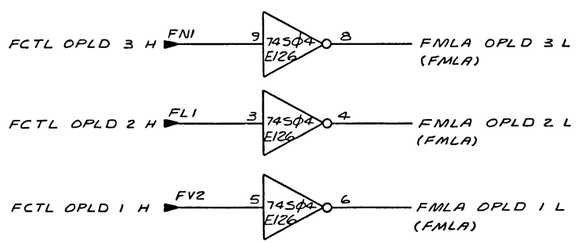

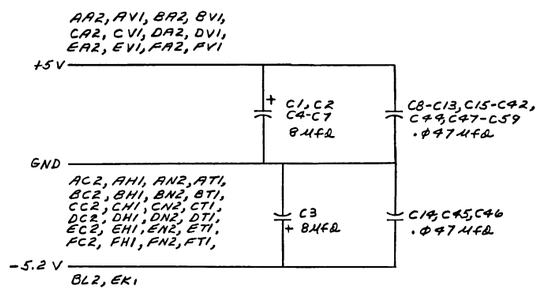

MULTIPLIER OPERAND LOAD

OPLD 3:Ø		MCI	MCØ	MCINT	MPI	MPØ
Ø	NOT USED	1	1	1	Ø	1
1	MC	1	1	1	Ø	Ø
2	MCI	1	Ø	1	Ø	Ø
3	NOT USED	1	Ø	1	Ø	Ø
4	MCØ, MPØ	Ø	1	Ø	Ø	1
5	MCØ	Ø	1	Ø	Ø	Ø
6	NOP	Ø	Ø	Ø	Ø	Ø
7	NOT USED	Ø	Ø	Ø	Ø	Ø
8	MCI, INT, MPI, Ø	1	Ø	1	1	1
9	NOT USED	1	Ø	1	Ø	1
A	MPI, MCI	Ø	Ø	1	1	Ø
B	MCINT	Ø	Ø	1	Ø	Ø
C	NP	Ø	Ø	Ø	1	1
D	MPØ	Ø	Ø	Ø	Ø	1
E	MPI	Ø	Ø	Ø	1	Ø
F	INIT	Ø	Ø	Ø	Ø	Ø

REVISIONS

CHK	CHANGE NO.	REV.

(MCAND LATCH) (SLOT 26)

TITLE FRACT MUL LOW (FMLA)

SIZE D | CODE CS | NUMBER M8287-Ø-1 | REV. C

SCALE — | SHEET 2 OF 15 | DIST.

SIZE D | CODE CS | NUMBER M8287-Ø-1 | REV. C

"THIS DRAWING AND SPECIFICATIONS, HEREIN, ARE THE PROPERTY OF DIGITAL EQUIPMENT CORPORATION AND SHALL NOT BE REPRODUCED OR COPIED OR USED IN WHOLE OR IN PART AS THE BASIS FOR THE MANUFACTURE OR SALE OF ITEMS WITHOUT WRITTEN PERMISSION.
COPYRIGHT © 1977 DIGITAL EQUIPMENT CORPORATION"

FMHC MPLIER 7 H
FMHC MPLIER 6 H
FMHC MPLIER 5 H
FMHC MPLIER 4 H
BUS MCAND 15 H
BUS MCAND 14 H
BUS MCAND 13 H
BUS MCAND 12 H
CM1
CN1
CP1
CR1
ENI ENØ
ROM B
23Ø128I-ØØ E31
74S157 E33
74S157 E32
74S374 E34
74S181 E35
FMLB ROM STRG 19 H (FMLR)
FMLB ROM STRG 18 H (FMLR)
FMLR ROM STRG 17 H
FMLR ROM STRG 16 H
FMLB CA4 L (FMLH)
FMLB PALU 17 H (FMLD)
FMLB PALU 16 H (FMLD)
FMLB PALU 15 H (FMLD)
FMLB PALU 14 H (FMLD)
FMLB +3V H
FMLH CB4 L
FMHM ODD L
EPI
FMLK MUL CLK Ø H
CLK ENAB
STB SØ
S3 S2 S1 SØ M CIN
A=B COUT4 G P

FMHC MPLIER 3 H
FMHC MPLIER 2 H
FMHC MPLIER 1 H
FMHC MPLIER Ø H
DJ1
CS2
CT2
DE2
ROM A
23Ø128I-ØØ E30
74S157 E44
74S157 E43
74S374 E45
74S181 E46
FMLB CA3 L (FMLH)
FMLB PALU 13 H (FMLD)
FMLB PALU 12 H (FMLD)
FMLB PALU 11 H (FMLE)
FMLB PALU 1Ø H (FMLE)
FMLC ROM STRG 1Ø H
FMLC ROM STRG 11 H
FMLB ROM STRG Ø9 H (FMLC)
FMLB ROM STRG Ø8 H (FMLC)
FMLB +3V H
FMLH CB3 L
+5V
R13 27Ø Ω
R14 56Ø Ω
C43 .Ø47 µF
FMLB +3V H (FMLB, C, D, M, N, P, R)

BUS MCAND 11 H
BUS MCAND 1Ø H
BUS MCAND Ø9 H
BUS MCAND Ø8 H
ROM A
23Ø128I-ØØ E41
74S157 E44
74S157 E43
74S374 E45
74S181 E46

REVISIONS		
CHK	CHANGE NO.	REV.

(MULTIPLIER PIPE 1) (SLOT 26)

TITLE	SIZE	CODE	NUMBER	REV.
FRACT MUL LOW (FMLB)	D	CS	M8287-Ø-1	C
SCALE —	SHEET 3 OF 15	DIST.		

DEC FORM NO. 882 198

"THIS DRAWING AND SPECIFICATIONS, HEREIN, ARE THE PROPERTY OF DIGITAL EQUIPMENT CORPORATION AND SHALL NOT BE REPRODUCED OR COPIED OR USED IN WHOLE OR IN PART AS THE BASIS FOR THE MANUFACTURE OR SALE OF ITEMS WITHOUT WRITTEN PERMISSION.
COPYRIGHT © 1977 DIGITAL EQUIPMENT CORPORATION"

SIZE D | CODE CS | NUMBER M8287-Ø-1 | REV. C

FMHC MPLIER 7 H
FMHC MPLIER 6 H
FMHC MPLIER 5 H
FMHC MPLIER 4 H
BUS MCAND Ø7 H
BUS MCAND Ø6 H
BUS MCAND Ø5 H
BUS MCAND Ø4 H
CMI
CNI
CPI
CRI

23Ø128I-ØØ E54 ROM B
23Ø128I-ØØ E53 ROM B

FMHC MPLIER 3 H
FMHC MPLIER 2 H
FMHC MPLIER 1 H
FMHC MPLIER Ø H
BJ1
CS2
CT2
DE2

23Ø128I-ØØ E66 ROM A
23Ø128I-ØØ E65 ROM A

BUS MCAND Ø3 H
BUS MCAND Ø2 H
BUS MCAND Ø1 H
BUS MCAND ØØ H

ENI ENØ

74S157 E56
74S157 E55
74S157 E68
74S157 E67

B3 A3 B1 A1 BØ AØ STB SØ
FØ F1 F2 F3

FMLD EN LOWER BYTE L
FMHM ODD L
EPI

74S374 E57
74S374 E69

DØ D1 D2 D3 D4 D5 D6 D7
QØ Q1 Q2 Q3 Q4 Q5 Q6 Q7
CLK ENAB

FMLK MUL CLK Ø H

FMLC ROM STRG 11 H (FMLB)
FMLC ROM STRG 1Ø H (FMLB)
FMLB ROM STRG Ø9 H
FMLB ROM STRG Ø8 H

74S181 E58
74S181 E7Ø

A=B COUT4 G P
B3 A3 B2 A2 B1 A1 BØ AØ
S3 S2 S1 SØ M CIN

FMLB CA2 L (FMLH)
FMLB CA1 L FMLH

FMLC PALU Ø3 H (FMLE)
FMLC PALU Ø2 H (FMLE)
FMLC PALU Ø1 H (FMLE)
FMLC PALU ØØ H (FMLE)

FMLB +3V H
FMLH CB2 L
FMLH CB1 L

74SØ8 E6

FMLC ROM STRG Ø1 H (FMLE)
FMLC ROM STRG ØØ H (FMLE)

(MULTIPLIER PIPE 2) (SLOT 26)

REVISIONS		
CHK	CHANGE NO.	REV.

TITLE: FRACT MUL LOW (FMLC)
SIZE D | CODE CS | NUMBER M8287-Ø-1 | REV. C
SCALE — | SHEET 4 OF 15 | DIST.

"THIS DRAWING AND SPECIFICATIONS, HEREIN, ARE THE PROPERTY OF DIGITAL EQUIPMENT CORPORATION AND SHALL NOT BE REPRODUCED OR COPIED OR USED IN WHOLE OR IN PART AS THE BASIS FOR THE MANUFACTURE OR SALE OF ITEMS WITHOUT WRITTEN PERMISSION.
COPYRIGHT © 1977 DIGITAL EQUIPMENT CORPORATION"

FMLD CC5 L (FMLH)

FMLD AALU 19 H (FMLF)
FMLD AALU 18 H (FMLF)
FMLD AALU 17 H (FMLF)
FMLD AALU 16 H (FMLF)

A=B COUT4 G P
74S181 E81
S3 S2 S1 S0 M CIN

FMLR ACCM 19 H
FMLR ACCM 18 H
FMLR ACCM 17 H
FMLR ACCM 16 H

FMLB +3V H
FMLH CD5 L

PPROD
74S194 E82
FMLK PALU 19 H
FMLK PALU 18 H
FMLB PALU 17 H
FMLB PALU 16 H

74S194 E80
FMLM CLR LOWER B L
FMLJ LSH 2 H

FMLD ACCM 15 H (FMLD)
FMLD ACCM 14 H (FMLD)
FMLD ACCM 13 H (FMLD)
FMLD ACCM 12 H (FMLD)

FMLD CC4 L (FMLH)

A=B COUT4 G P
74S181 E93
S3 S2 S1 S0 M CIN

FMLD ACCM 15 H
FMLD ACCM 14 H
FMLD ACCM 13 H
FMLD ACCM 12 H

FMLA +3V H
FMLH CD4 L

FMLD ACCM 11 H (FMLE)
FMLD ACCM 10 H (FMLE)
FMLD ACCM 09 H (FMLE)
FMLD ACCM 08 H (FMLE)

74S194 E92
FMLM CLR LOWER B L
FMLJ LSH 16 H
FMHP PPROD CTL LOW H EH2
FMHP ACCM CTL 1 H CD1

FMLD AALU 12 H (FMLF)
FMLD AALU 13 H (FMLF)
FMLD AALU 14 H (FMLE)
FMLD AALU 15 H (FMLF)

PPROD
74S194 E94
FMLB PALU 15 H
FMLB PALU 14 H
FMLB PALU 13 H
FMLB PALU 12 H

FMLK MUL CLK Ø H

FMLM CLR LOWER B L
FMHP PPROD CTL LOW H EH2

FMHR TTH H EM1
FCTF DOUBLE H FF1
74S00 E102
74S10 E101
74S20 E90
FMLD EN MCI L (FMHA,FMLA) EA1
FMLD EN MCØ L (FMHA,FMLA) EB1

TRCF OPC 7 H EV2
74S04 E126
FMLD EN MCX L (FMLA)

FMHR TTH H EM1
74S04 E76
FMLD EN MCIL L (FMLA)

FCTF DOUBLE H FF1
74S00 E102
FMHN MCAND EN H FL2
FMLD EN MCINT L (FMHA,FMLA) FD2

74S11 E114
FCTF EMOD L FK2
FMLD EN LOWER BYTE L (FMLC)

REVISIONS

CHK	CHANGE NO.	REV.

(MULTIPLIER PIPE 3) (SLOT 26)

TITLE FRACT MUL LOW (FMLD)
SIZE D | CODE CS | NUMBER M8287-Ø-1 | REV. C
SCALE — | SHEET 5 OF 15 | DIST.

SIZE D | CODE CS | NUMBER M8287-Ø-1 | REV. C

"THIS DRAWING AND SPECIFICATIONS, HEREIN, ARE THE PROPERTY OF DIGITAL EQUIPMENT CORPORATION AND SHALL NOT BE REPRODUCED OR COPIED OR USED IN WHOLE OR IN PART AS THE BASIS FOR THE MANUFACTURE OR SALE OF ITEMS WITHOUT WRITTEN PERMISSION.
COPYRIGHT © 1977 DIGITAL EQUIPMENT CORPORATION"

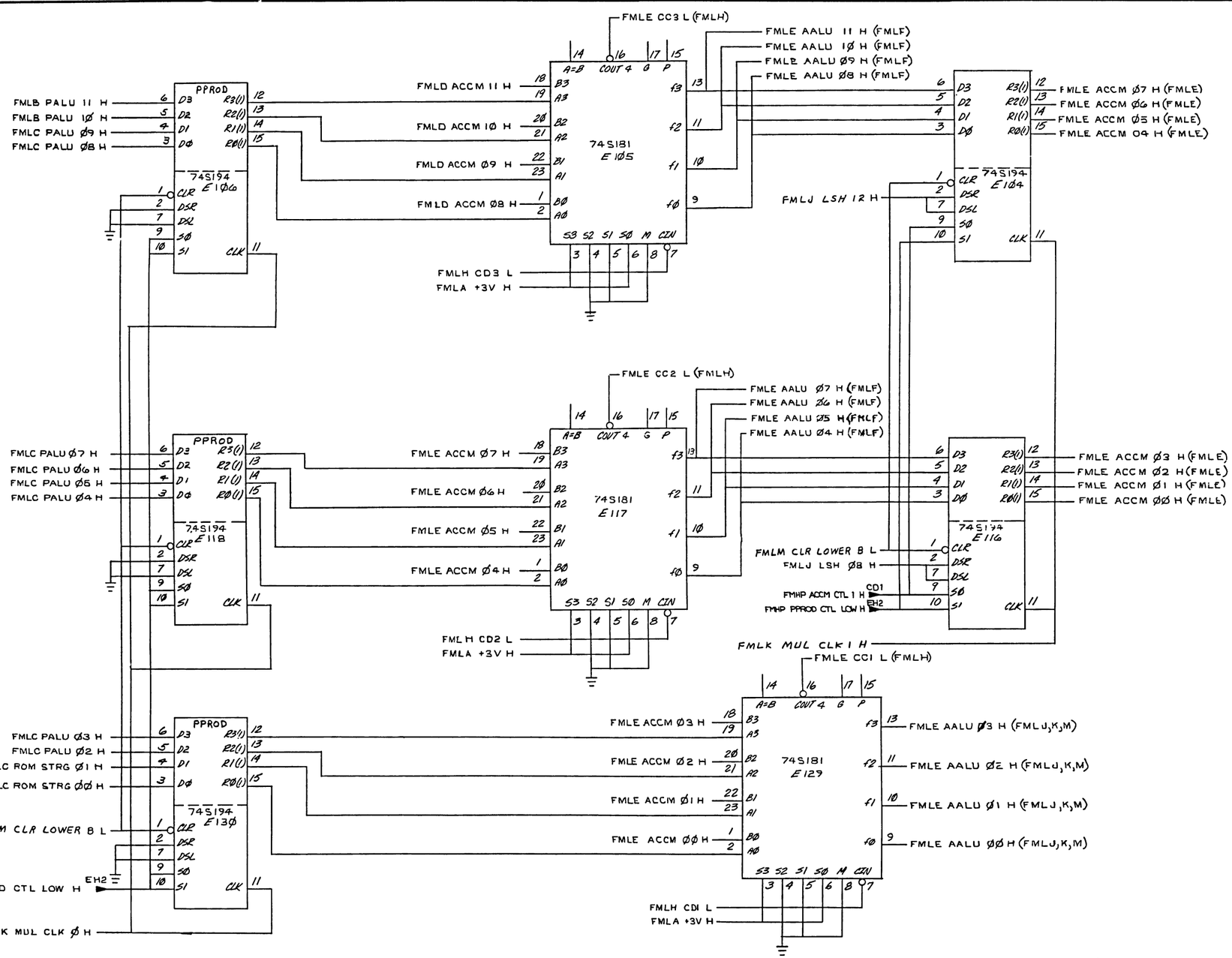

REVISIONS		
CHK	CHANGE NO.	REV.

(MULTIPLIER PIPE 4) (SLOT 26)

TITLE	SIZE	CODE	NUMBER	REV.
FRACT MUL LOW (FMLE)	D	CS	M8287-Ø-1	C
SCALE — SHEET 6 OF 15	DIST.			

"THIS DRAWING AND SPECIFICATIONS, HEREIN, ARE THE PROPERTY OF DIGITAL EQUIPMENT CORPORATION AND SHALL NOT BE REPRODUCED OR COPIED OR USED IN WHOLE OR IN PART AS THE BASIS FOR THE MANUFACTURE OR SALE OF ITEMS WITHOUT WRITTEN PERMISSION.
COPYRIGHT © 1977 DIGITAL EQUIPMENT CORPORATION"

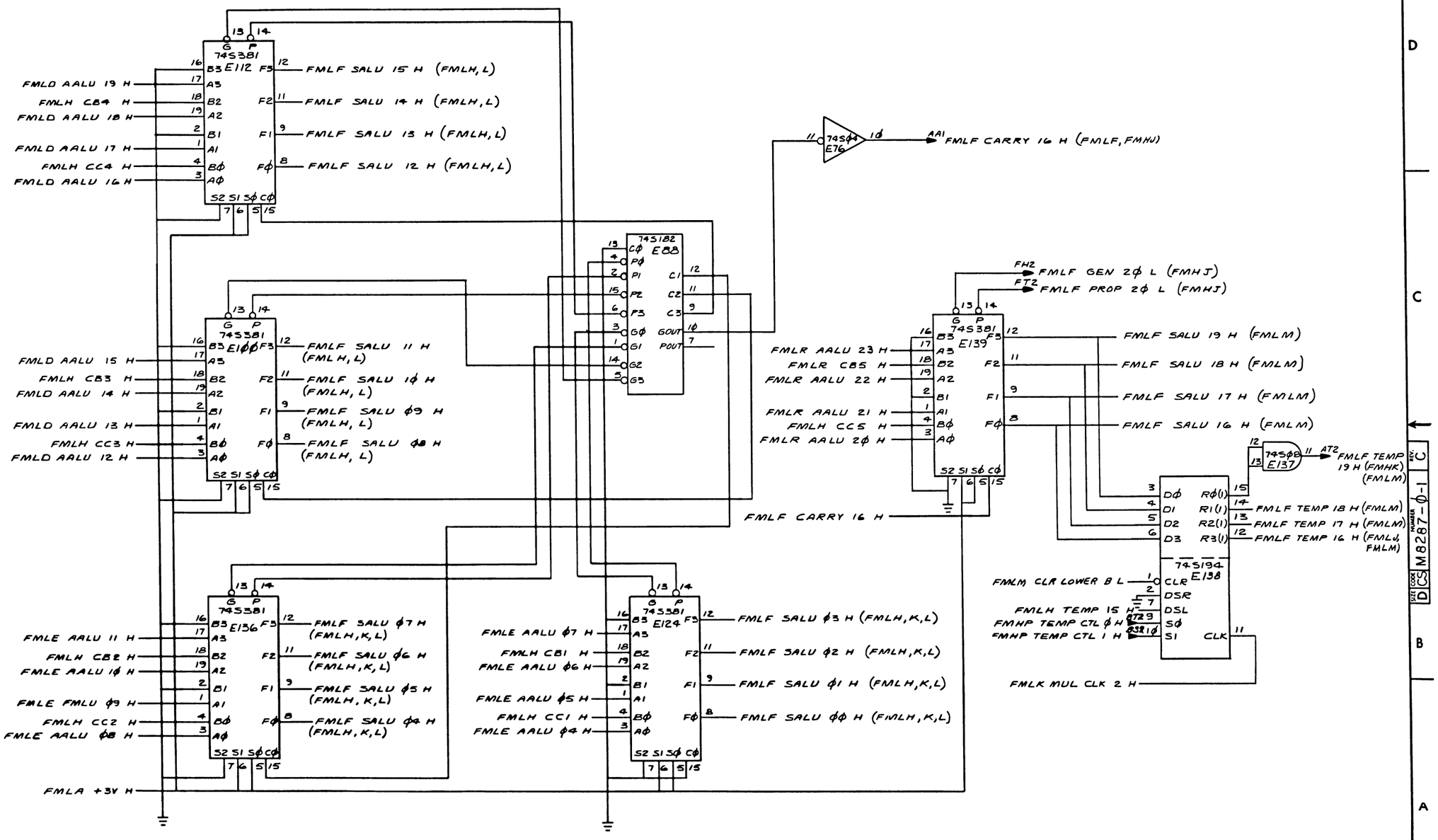

REVISIONS		
CHK	CHANGE NO.	REV.

(LEAST SIGNIFICANT HALF OF ADDER) (SLOT 26)

TITLE	SIZE	CODE	NUMBER	REV.
FRACT MUL LOW (FMLF)	D	CS	M8287-Φ-1	C
SCALE —H— SHEET 7 OF 15	DIST.			

"THIS DRAWING AND SPECIFICATIONS, HEREIN, ARE THE PROPERTY OF DIGITAL EQUIPMENT CORPORATION AND SHALL NOT BE REPRODUCED OR COPIED OR USED IN WHOLE OR IN PART AS THE BASIS FOR THE MANUFACTURE OR SALE OF ITEMS WITHOUT WRITTEN PERMISSION.
COPYRIGHT ©1977 DIGITAL EQUIPMENT CORPORATION"

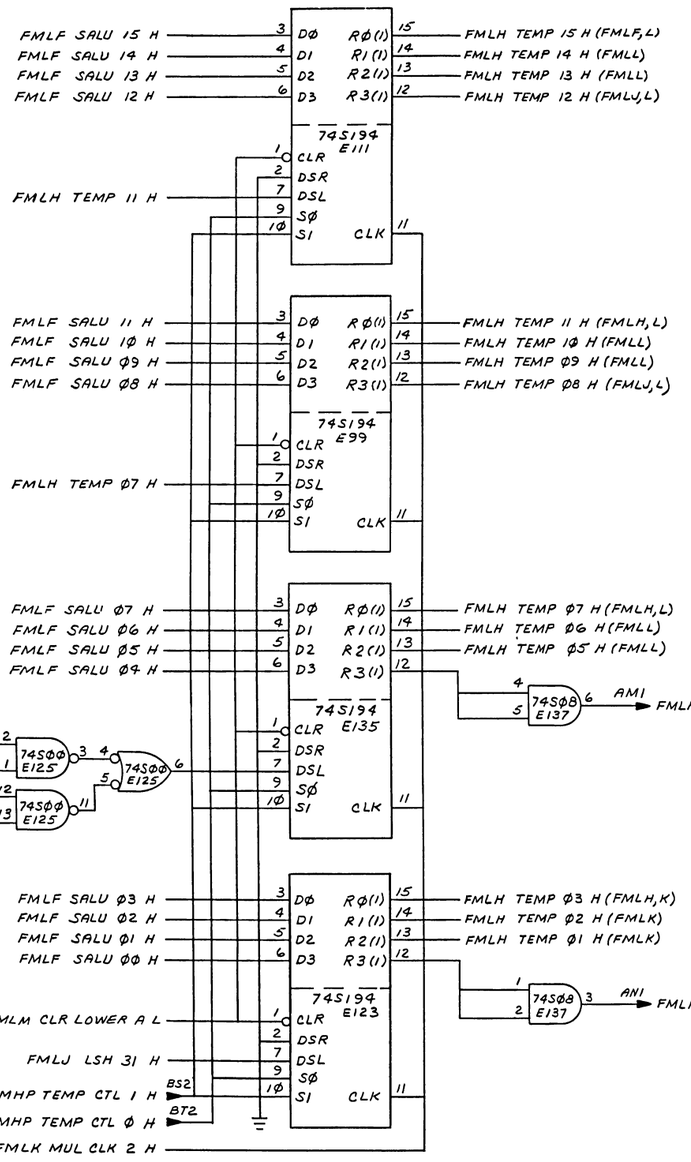

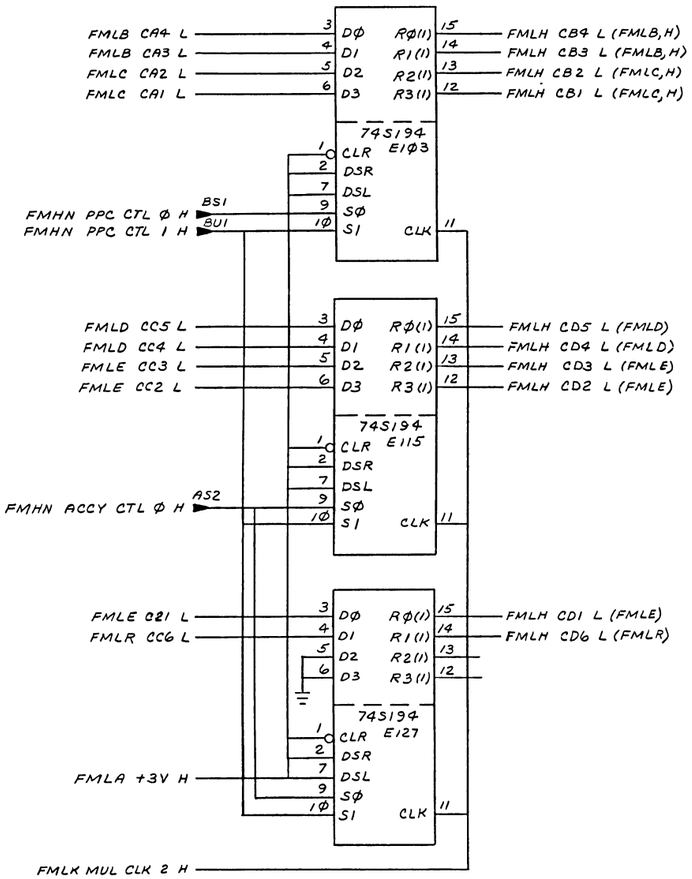

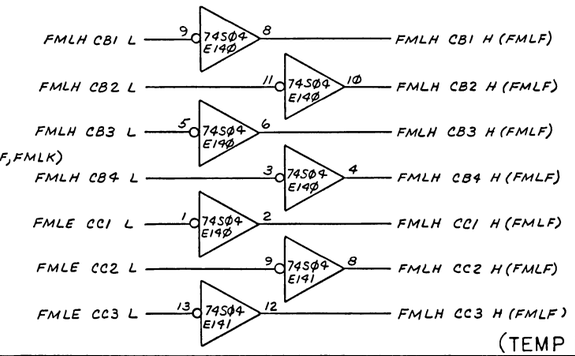

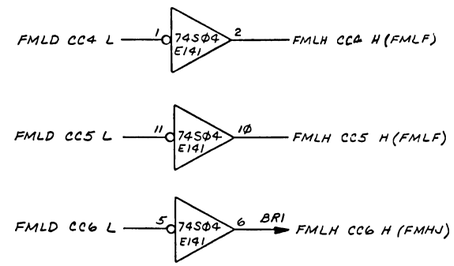

REVISIONS		
CHK	CHANGE NO.	REV.

(TEMP REGISTER, CARRY HOLD) (SLOT 26)

TITLE	SIZE	CODE	NUMBER	REV.
FRACT MUL LOW (FMLH)	D	CS	M8287-0-1	C
SCALE —11—	SHEET 8 OF 15		DIST.	

DEC FORM NO. DRD 130

"THIS DRAWING AND SPECIFICATIONS, HEREIN, ARE THE PROPERTY OF DIGITAL EQUIPMENT CORPORATION AND SHALL NOT BE REPRODUCED OR COPIED OR USED IN WHOLE OR IN PART AS THE BASIS FOR THE MANUFACTURE OR SALE OF ITEMS WITHOUT WRITTEN PERMISSION.
COPYRIGHT © 1977 DIGITAL EQUIPMENT CORPORATION"

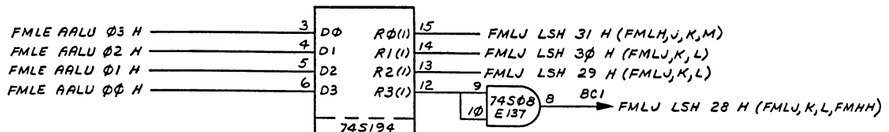

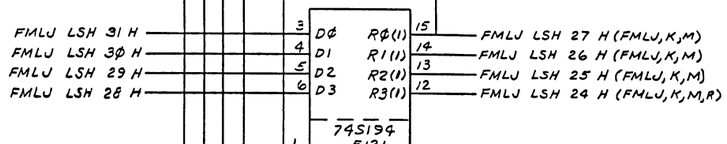

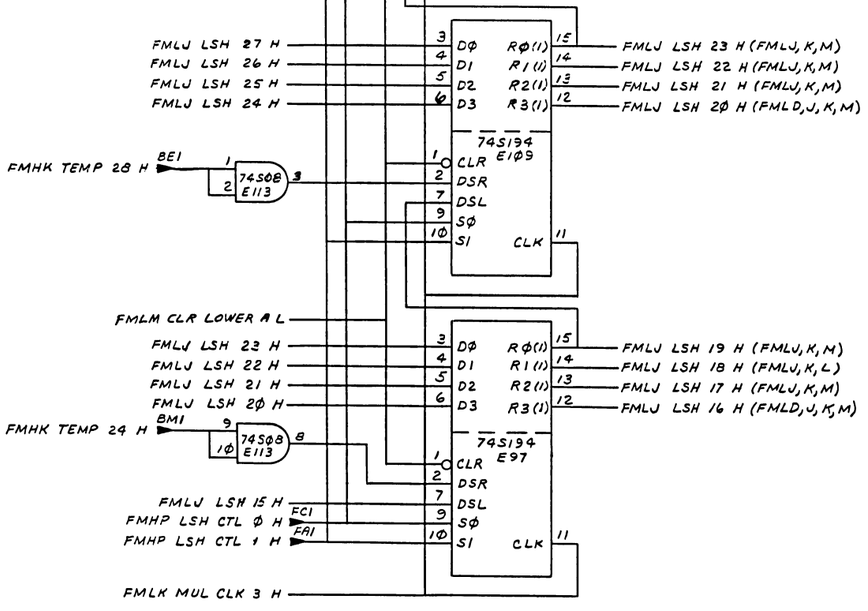

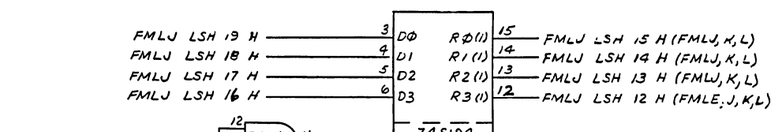

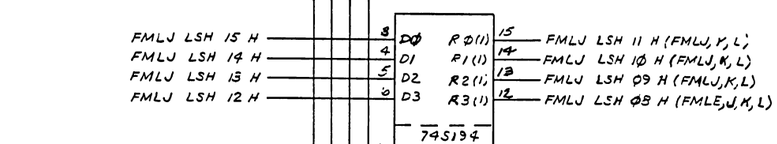

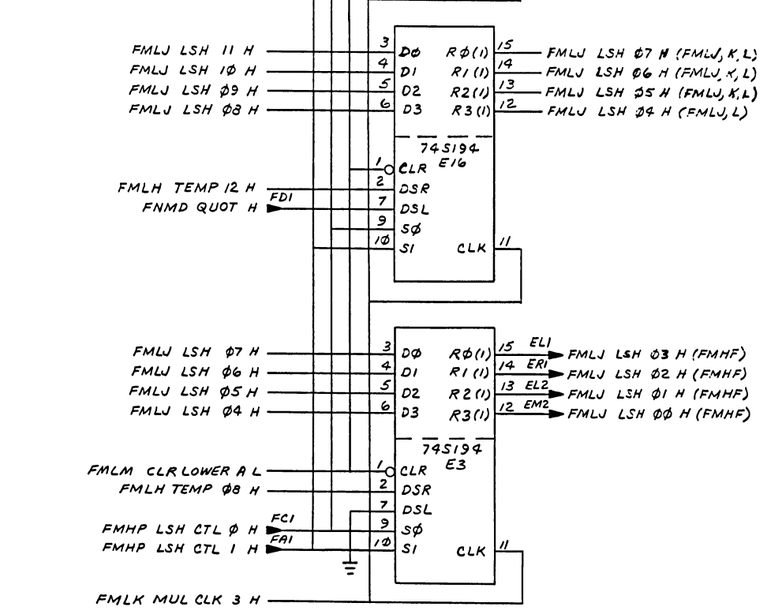

(LSH REGISTERS) (SLOT 26)

REVISIONS		
CHK	CHANGE NO.	REV.

TITLE	SIZE	CODE	NUMBER	REV.
FRACT MUL LOW (FMLJ)	D	CS	M8287-Ø-1	C
SCALE —/—	SHEET 9 OF 15	DIST.		

REV. C
SIZE D CODE CS NUMBER M8287-Ø-1

"THIS DRAWING AND SPECIFICATIONS, HEREIN, ARE THE PROPERTY OF DIGITAL EQUIPMENT CORPORATION AND SHALL NOT BE REPRODUCED OR COPIED OR USED IN WHOLE OR IN PART AS THE BASIS FOR THE MANUFACTURE OR SALE OF ITEMS WITHOUT WRITTEN PERMISSION.
COPYRIGHT © 1977 DIGITAL EQUIPMENT CORPORATION"

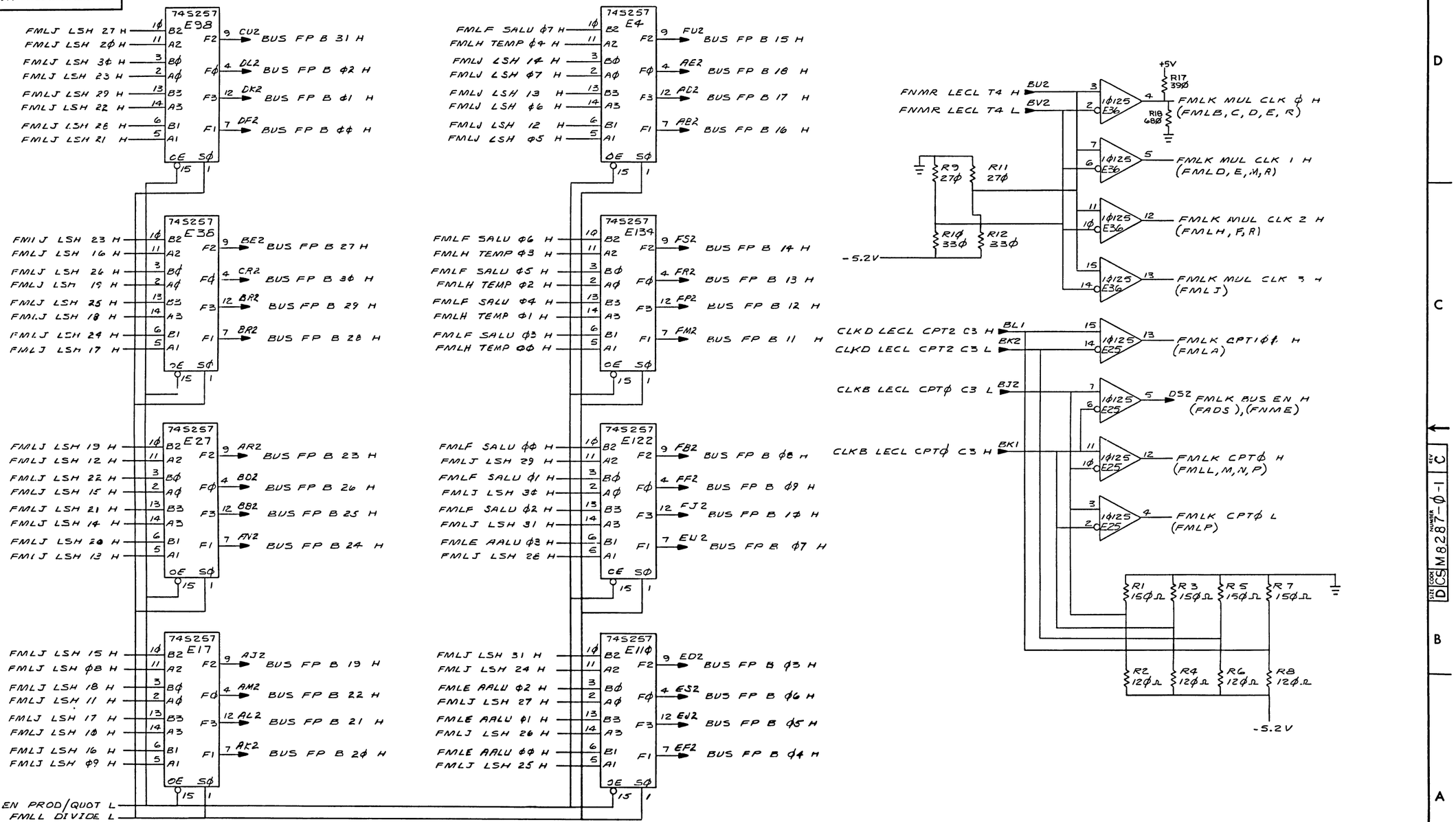

REVISIONS		
CHK	CHANGE NO.	REV.

(BUS B SELECTOR/DRIVER) (SLOT 26)

TITLE	SIZE	CODE	NUMBER	REV.
FRACT MUL LOW (FMLK)	D	CS	M8287-Φ-1	C
SCALE —" SHEET 10 OF 15	DIST.			

"THIS DRAWING AND SPECIFICATIONS, HEREIN, ARE THE PROPERTY OF DIGITAL EQUIPMENT CORPORATION AND SHALL NOT BE REPRODUCED OR COPIED OR USED IN WHOLE OR IN PART AS THE BASIS FOR THE MANUFACTURE OR SALE OF ITEMS WITHOUT WRITTEN PERMISSION.
COPYRIGHT © 1977 DIGITAL EQUIPMENT CORPORATION"

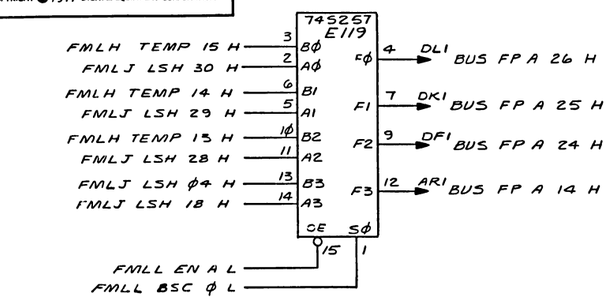

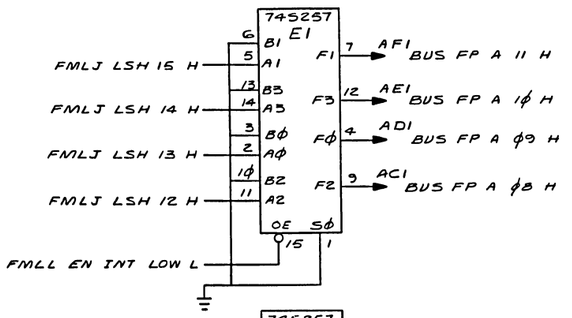

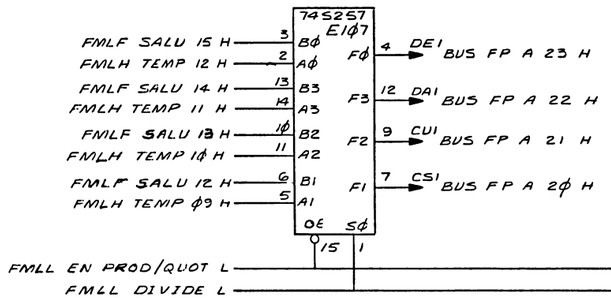

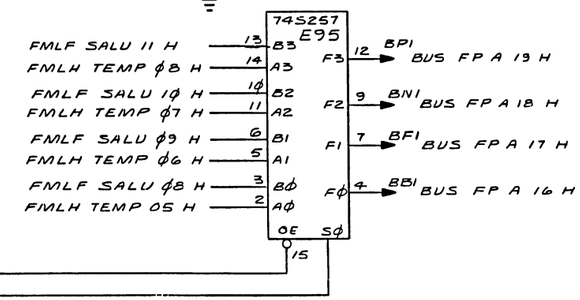

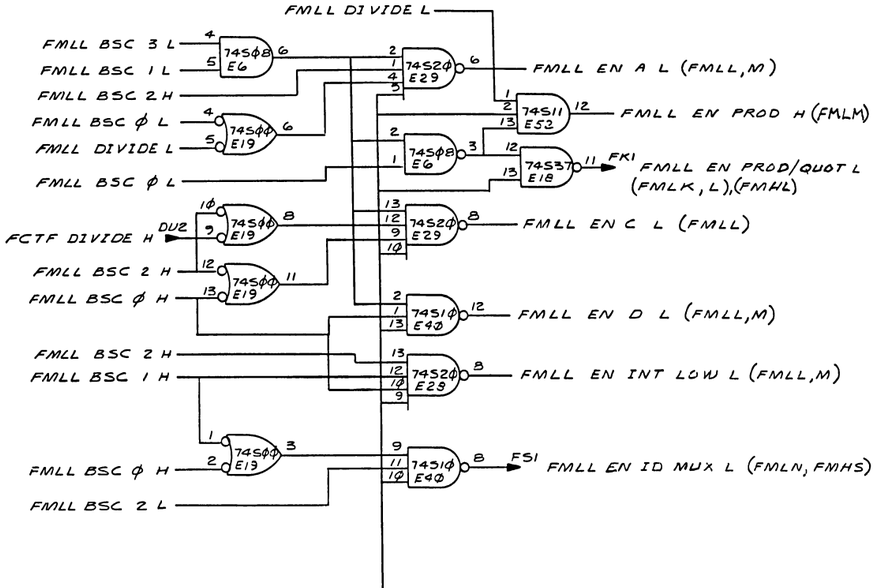

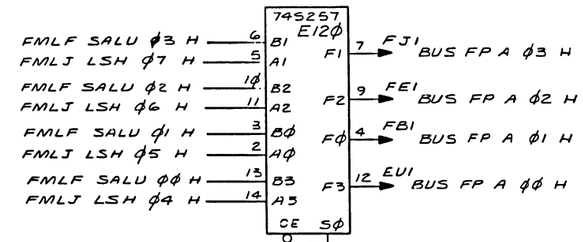

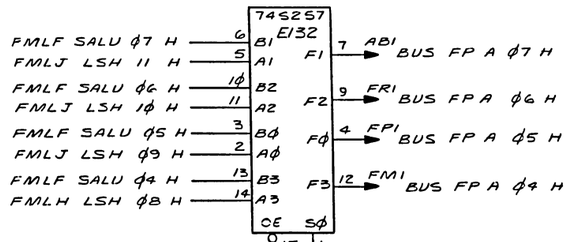

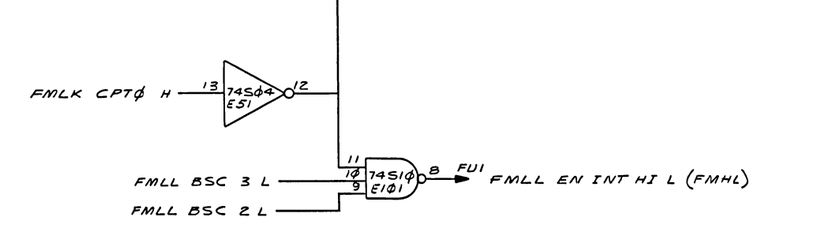

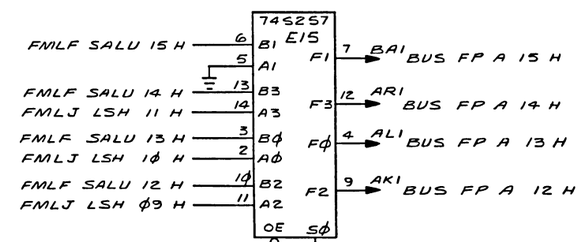

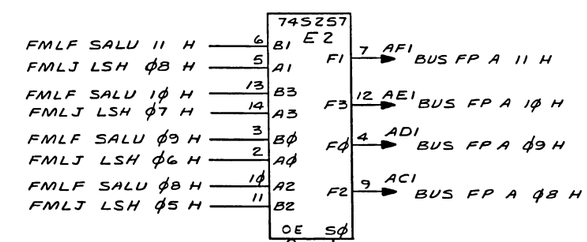

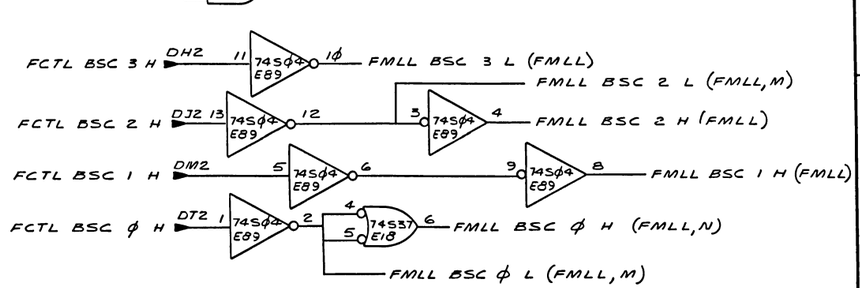

REVISIONS		
CHK	CHANGE NO.	REV.

(OUTPUT BUFFERS) (SLOT 26)

TITLE: FRACT MUL LOW (FMLL)

SIZE D | CODE CS | NUMBER M8287-Ø-1 | REV. C

SCALE —11— | SHEET 11 OF 15 | DIST.

DEC FORM NO. 5100 150

"THIS DRAWING AND SPECIFICATIONS, HEREIN, ARE THE PROPERTY OF DIGITAL EQUIPMENT CORPORATION AND SHALL NOT BE REPRODUCED OR COPIED OR USED IN WHOLE OR IN PART AS THE BASIS FOR THE MANUFACTURE OR SALE OF ITEMS WITHOUT WRITTEN PERMISSION.
COPYRIGHT © 1977 DIGITAL EQUIPMENT CORPORATION"

74S257 E131
MLF TEMP 19 H → B3
FMLE AALU Ø2 H → A3
FMLF TEMP 18 H → B1
FMLE AALU Ø1 H → A1
FMLF TEMP 17 H → B2
FMLE AALU ØØ H → A2
FMLF TEMP 16 H → BØ
FMLJ LSH 31 H → AØ
OE SØ ← FMLL EN A L
FMLL BSC Ø L
f3 → EJ1 → BUS FP A 3Ø H
f1 → EF1 → BUS FP A 29 H
f2 → ED1 → BUS FP A 28 H
fØ → EC1 → BUS FP A 27 H

74S257 E96
FMLF SALU 19 H → B3
FMLJ LSH 23 H → A3
FMLF SALU 18 H → BØ
FMLJ LSH 22 H → AØ
FMLF SALU 17 H → B1
FMLJ LSH 21 H → A1
FMLF SALU 16 H → B2
FMLJ LSH 2Ø H → A2
OE SØ ← FMLL EN D L
FMLL BSC 2 L
f3 → BPI → BUS FP A 19 H
fØ → BNI → BUS FP A 18 H
f1 → BFI → BUS FP A 17 H
f2 → BBI → BUS FP A 16 H

74S257 E14
FMLJ LSH 29 H → A3
B3
FMLJ LSH 19 H → A1
B1
FMLJ LSH 17 H → AØ
BØ
FMLJ LSH 16 H → A2
B2
OE SØ
f3 → CSI → BUS FP A 2Ø H
f1 → BAI → BUS FP A 15 H
fØ → ALI → BUS FP A 13 H
f2 → AKI → BUS FP A 12 H

FMLP RCV ID Ø8 H → DØ
DI
D2
D3
CLR ← FMLB +3V H
DSR
DSL
SØ
SI ← FMLP LOAD U8 H
CLK ← FMLK CPTØ H
RØ(1)
R1(1)
R2(1)
R3(1)
74S194 E62

FMLP RCV ID Ø7 H → DØ
FMLP RCV ID Ø6 H → DI
FMLP RCV ID Ø5 H → D2
FMLP RCV ID Ø4 H → D3
CLR ← FMLB +3V H
DSR
DSL
SØ
SI ← FMLP LOAD U8 H
CLK ← FMLK CPTØ H
RØ(1)
R1(1)
R2(1)
R3(1)
74S194 E74

FMLP RCV ID Ø3 H → DØ
FMLP RCV ID Ø2 H → DI
FMLP RCV ID Ø1 H → D2
FMLP RCV ID ØØ H → D3
CLR ← FMLB +3V H
DSR
DSL
SØ
SI ← FMLP LOAD U8 H
CLK ← FMLK CPTØ H
RØ(1)
R1(1)
R2(1)
R3(1)
74S194 E86

FCTF CRADR Ø8 H → EN1
74S1Ø E5Ø
74S04 E51
74S52Ø E28 → FMLM SYNC H (FMLP)
AF2
FCTM CPTI5Ø A H
74S37 E18 → AH2 → FMLM SYNC PT H (TEST POINT)

74LS85 E75
FCTF CRADR Ø7 H → DCI
FCTF CRADR Ø6 H → DDI
FCTF CRADR Ø5 H → DPI
FCTF CRADR Ø4 H → CV2
A3
A2
AI
AØ
B3
B2
BI
BØ
A>B
A=B
A<B
IN> IN= IN<
74LS85 E87
FCTF CRADR Ø3 H → DB2
FCTF CRADR Ø2 H → DD2
FCTF CRADR Ø1 H → DBI
FCTF CRADR ØØ H → DUI
FMLB +3V H
FMNP CLR ENABLE H → DP2
FMLK MUL CLK 1 H
74S37 E192 → FMLM CLR LOWER A L (FMLH,J)
74S37 E192 → FMLM CLR LOWER B L (FMLD,E,F,R)

FMLE AALU Ø3 H → 74S241 E1Ø8 → ES1 → BUS FP A 31 H
FMLL EN INT LOW L
FMLJ LSH 27 H → 74S241 E1Ø8 → DE1 → BUS FP A 23 H
FMLJ LSH 26 H → 74S241 E1Ø8 → DA1 → BUS FP A 22 H
FMLJ LSH 25 H → 74S241 E1Ø8 → CU1 → BUS FP A 21 H
FMLF SALU 19 H → 74S241 E1Ø8 → EC1 → BUS FP A 27 H
FMLF SALU 18 H → 74S241 E1Ø8 → DL1 → BUS FP A 26 H
FMLL EN PROD H
FMLF SALU 17 H → 74S241 E1Ø8 → DK1 → BUS FP A 25 H
FMLF SALU 16 H → 74S241 E1Ø8 → DF1 → BUS FP A 24 H

(OUTPUT BUFFERS AND MICRO BREAK REGISTERS) (SLOT 26)

REVISIONS		
CHK	CHANGE NO.	REV.

TITLE	SIZE	CODE	NUMBER	REV.
FRACT MUL LOW (FMLM)	D	CS	M8287-Ø-1	C
SCALE —	SHEET 12 OF 15	DIST.		

"THIS DRAWING AND SPECIFICATIONS, HEREIN, ARE THE PROPERTY OF DIGITAL EQUIPMENT CORPORATION AND SHALL NOT BE REPRODUCED OR COPIED OR USED IN WHOLE OR IN PART AS THE BASIS FOR THE MANUFACTURE OR SALE OF ITEMS WITHOUT WRITTEN PERMISSION.
COPYRIGHT © 1977 DIGITAL EQUIPMENT CORPORATION"

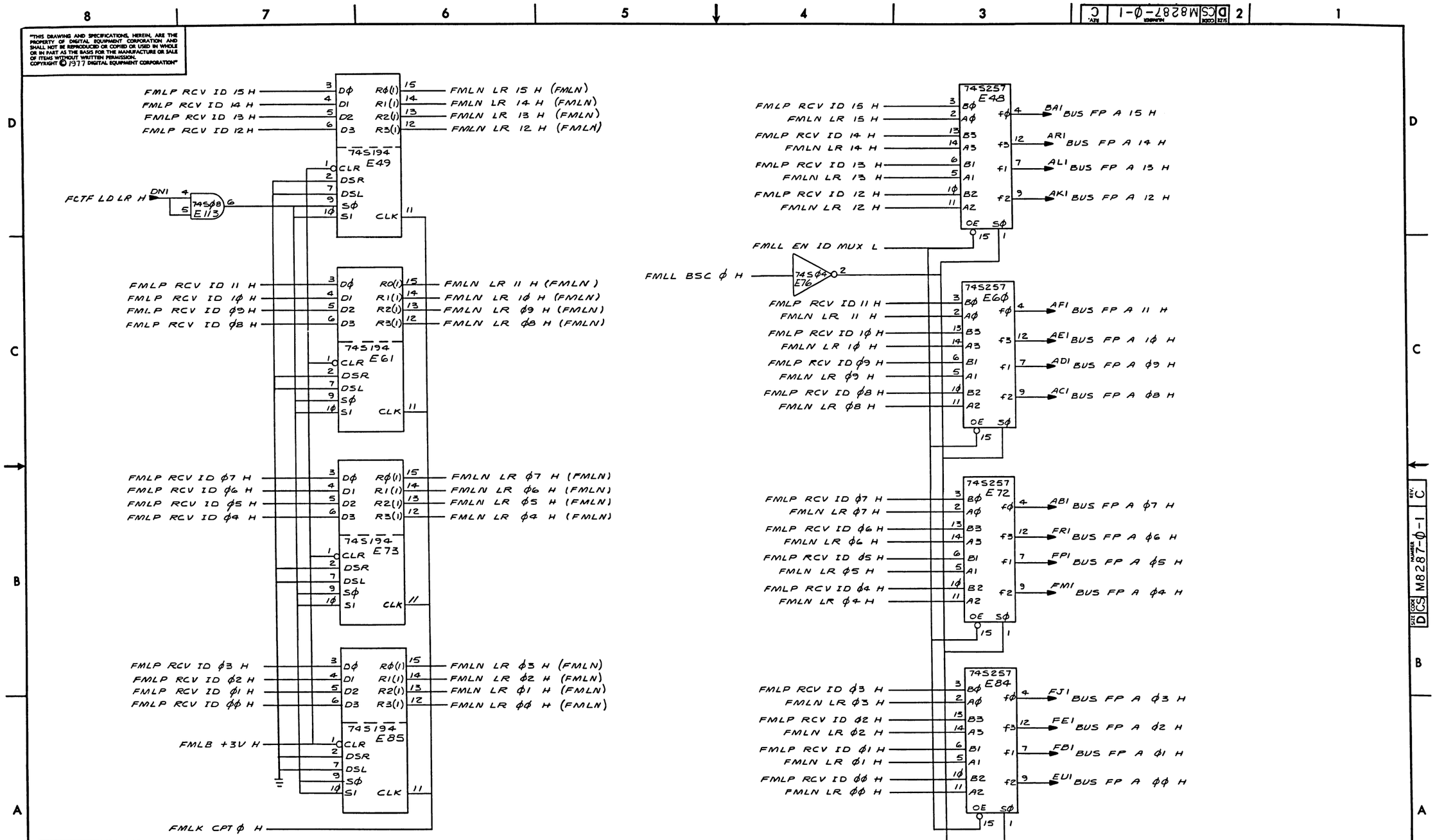

(LR REGISTER AND ID MUX) (SLOT 26)

REVISIONS		
CHK	CHANGE NO.	REV.

TITLE: FRACT MUL LOW (FMLN)

SIZE: D | CODE: CS | NUMBER: M8287-0-1 | REV.: C

SCALE: — | SHEET 13 OF 15 | DIST.

"THIS DRAWING AND SPECIFICATIONS, HEREIN, ARE THE PROPERTY OF DIGITAL EQUIPMENT CORPORATION AND SHALL NOT BE REPRODUCED OR COPIED OR USED IN WHOLE OR IN PART AS THE BASIS FOR THE MANUFACTURE OR SALE OF ITEMS WITHOUT WRITTEN PERMISSION.
COPYRIGHT ©1977 DIGITAL EQUIPMENT CORPORATION"

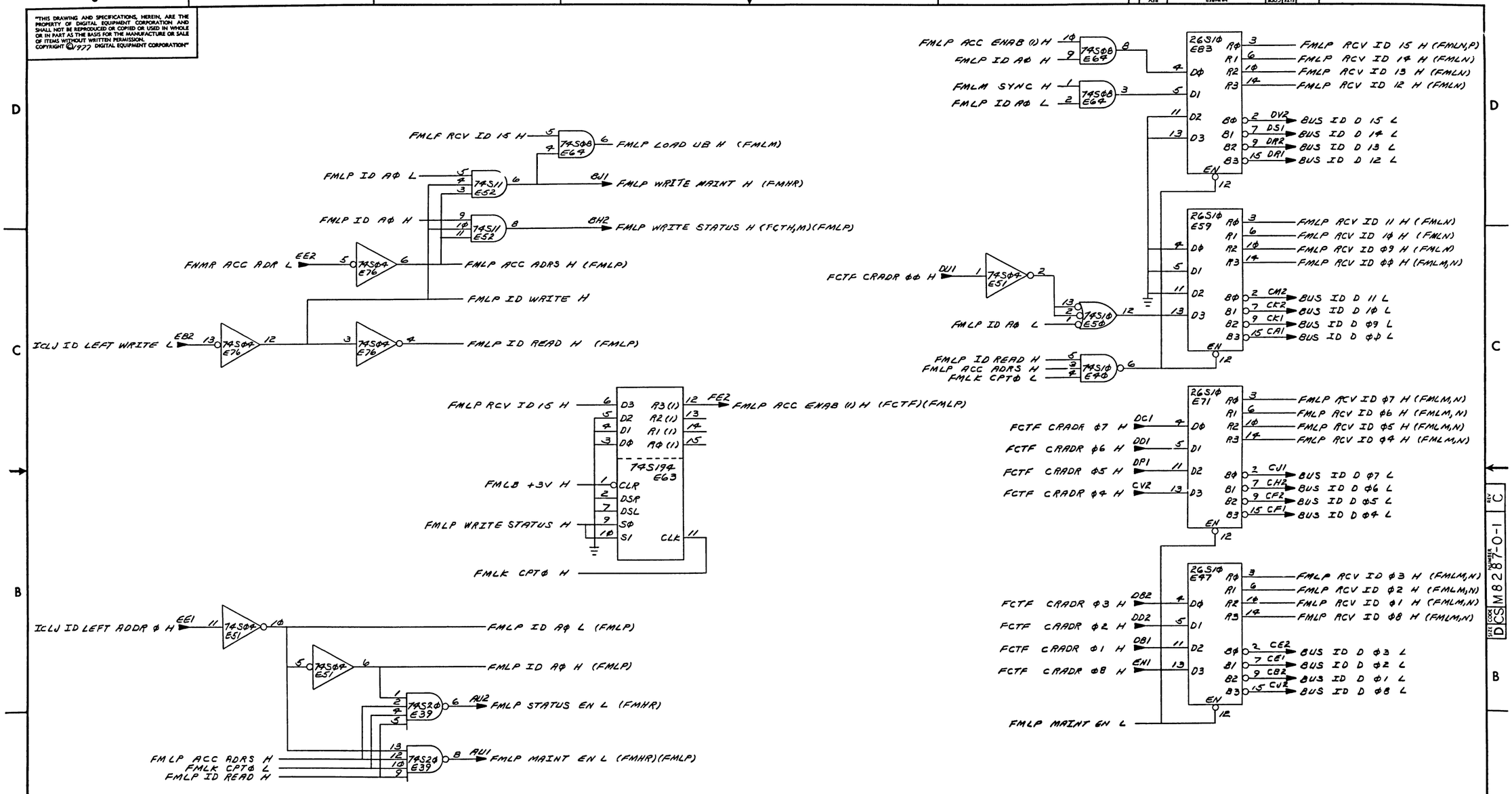

REVISIONS		
CHK	CHANGE NO.	REV.

(ID BUS INTERFACE) (SLOT 26)

TITLE	SIZE	CODE	NUMBER	REV.
FRACT MUL LOW (FMLP)	D	CS	M8287-0-1	C
SCALE	SHEET 14 OF 15	DIST.		

DCS M8287-0-1 REV C

"THIS DRAWING AND SPECIFICATIONS, HEREIN, ARE THE PROPERTY OF DIGITAL EQUIPMENT CORPORATION AND SHALL NOT BE REPRODUCED OR COPIED OR USED IN WHOLE OR IN PART AS THE BASIS FOR THE MANUFACTURE OR SALE OF ITEMS WITHOUT WRITTEN PERMISSION.
COPYRIGHT ©1977 DIGITAL EQUIPMENT CORPORATION"

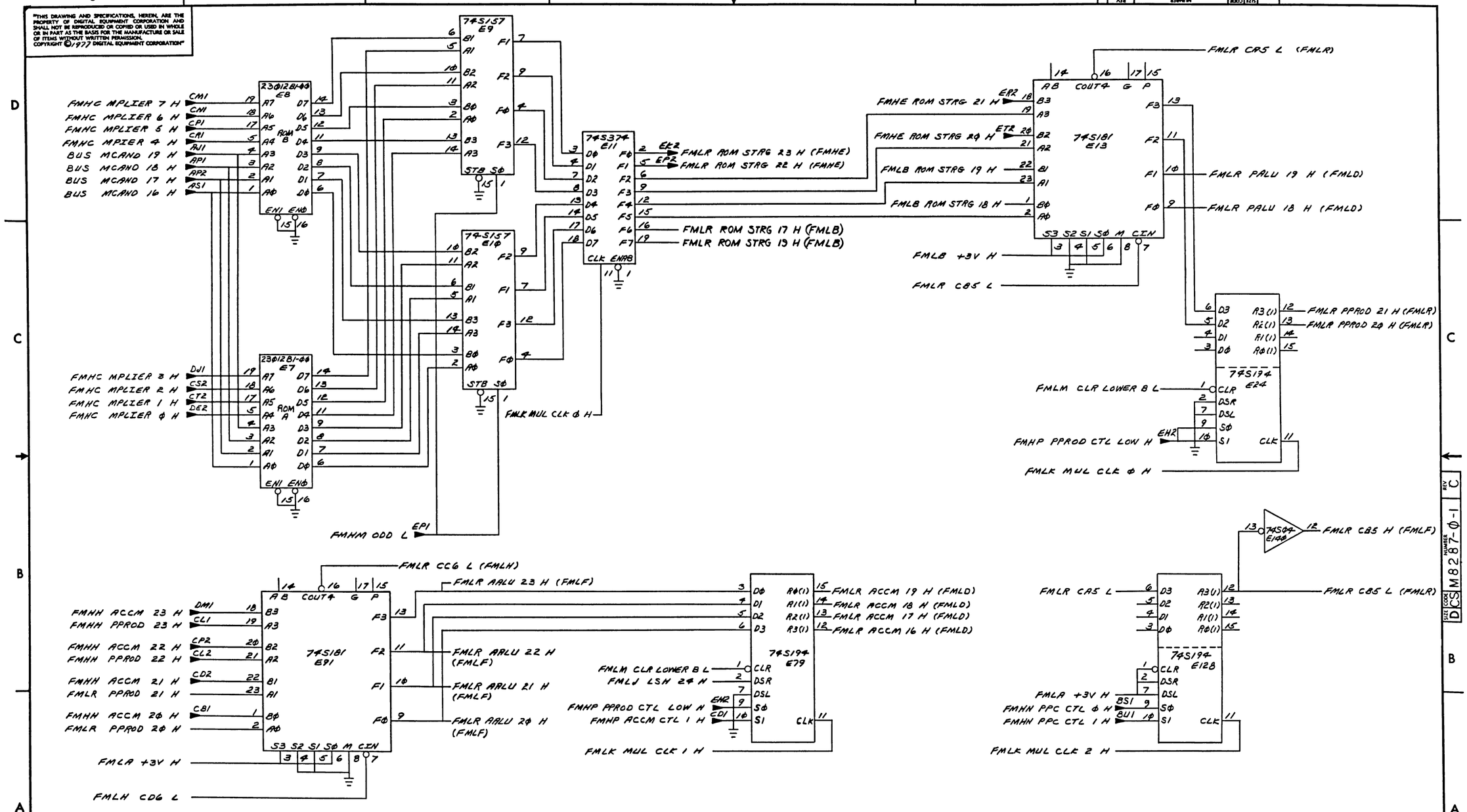

REVISIONS		
CHK	CHANGE NO.	REV.

(MULTIPLIER PIPE) (SLOT 26)

TITLE	SIZE	CODE	NUMBER	REV.
FRACT MUL LOW (FMLR)	D	CS	M8287-0-1	C
SCALE	SHEET 15 OF 15	DIST.		

DEC FORM NO. DOD 130

COMPONENT SIDE VIEW

CHG	CHANGE NO	REV

NOTES:

SIZE	CODE	NUMBER	REV
E	UA	M8288-0	*

digital

TITLE: FPA 11ON ADDER

SIGNATURES / DATE / SCALE / SHT / OF / SIZE

ETCH REV: 4

FICHE DESIGN DATA ONLY REV: A

"THIS DRAWING AND SPECIFICATIONS HEREIN ARE THE PROPERTY OF DIGITAL EQUIPMENT CORPORATION AND SHALL NOT BE REPRODUCED OR COPIED OR USED IN WHOLE OR IN PART AS THE BASIS FOR THE MANUFACTURE OR SALE OF ITEMS WITHOUT WRITTEN PERMISSION.
COPYRIGHT © DIGITAL EQUIPMENT CORPORATION"

5013085A
M8288A

LAYER 1

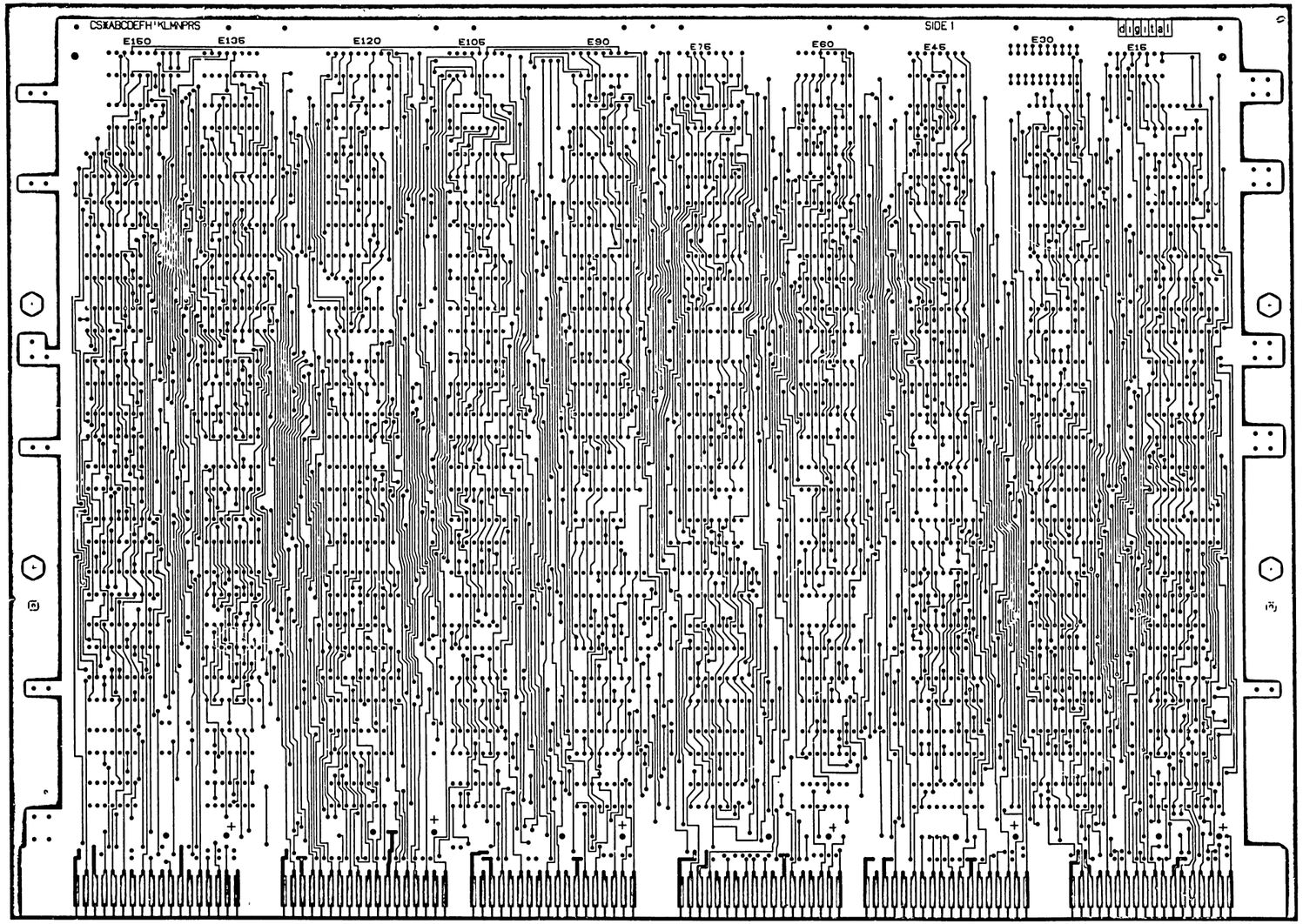

REVISIONS		
CHK	CHANGE NO	REV

TITLE	SIZE	CODE	NUMBER	REV
FRACTION ADDER	E	UA	M8288-0-0	*
SCALE 2-1	SHEET 2 OF 3	DIST		

DEC FORM NO
DWG 108

LAYER 4

REVISIONS		
CHK	CHANGE NO	REV

TITLE	SIZE	CODE	NUMBER	REV
FRACTION ADDER	E	U3	M8288-0-U	*
SCALE 2:1 SHEET 3 OF 3	DIST			

DIGITAL EQUIPMENT CORPORATION
PARTS LIST

MADE BY D. BILODEAU DATE 27 JUNE 77	CHECKED Frank Smart DATE 9-27-77	SECTION
ENG Slacky DATE 9-30-77	PROD Mike Teulia DATE 9-27-77	ISSUED SECTION

ITEM NO.	DRAWING NO.	PART NO.	DESCRIPTION	QUANTITY / VARIATION M8288-0-0	REF DESIGNATION
1	D-MD-5013085-0-0	5013085	ETCH BOARD		
2		1012784	CAPACITOR, .047 uf 50V	33	C1,C8 thru C24,C26,C28 thru C31,C34 thru C43
3		1012084-01	CAPACITOR, 8 uf 25 W	6	C2 thru C7
4		1301890	RESISTOR, 560 OHM, 1/4W, 5%	2	R3,R4
5		1301972	RESISTOR, 270 OHM, 1/4W, 5%	2	R1,R2
6		1910532	I.C. DEC 74SØØ	3	E106, E121, E137
7		1910534	I.C. DEC 74SØ4	1	E91
8		1912389	I.C. DEC 74SØ8	1	E136
9		1910536	I.C. DEC 74S1Ø	1	E94
10		1912746	I.C. DEC 74S37	2	E79,E81
11		1910541	I.C. DEC 74S4Ø	1	E122
12		1910545	I.C. DEC 74S112	1	E76
13		1910548	I.C. DEC 74S157	32	E2,E3,E9,E19, E20, E22 thru E25,E34,E35, E39, E47,E49,E62,E64,E82,E90, E96,E99,E105,E111, E112,E114,E125 thru E129,E145,E146,142
14		1913839	I.C. DEC 74LS165	3	E107,E109,E115
15		1912097	I.C. DEC 74S182	5	E13,E66,E86,E117,E135
16		1911641	I.C. DEC 74S257	17	E5, E7,E8,E4,E48, E61,E63,E74, E75, E78, E93, E92,E123, E124,E138, E144,E143
17		1913671	I.C. DEC 74S374	17	E1, E6,E16,E17,E18,E31,E32,E33,E77, E95,E98, E110, E113,E108,E139,E140,E141
18		1913700	I.C. DEC 74S381	16	E10,E11,E12,E21,E26,E36,E80,E97,E65,E120, E130 thru E133,E147,E150

E.C.O. NO.

"THIS DRAWING AND SPECIFICATIONS, HEREIN, ARE THE PROPERTY OF DIGITAL EQUIPMENT CORPORATION AND SHALL NOT BE REPRODUCED OR COPIED OR USED IN WHOLE OR IN PART AS THE BASIS FOR THE MANUFACTURE OR SALE OF ITEMS WITHOUT WRITTEN PERMISSION. COPYRIGHT © DIGITAL EQUIPMENT CORPORATION"

TITLE	ASSY NO.	SIZE	CODE	NUMBER	REV.
FRACTION ADDER	E-UA-M8288-Ø-Ø	B	PL	M8288-0-Ø	*
	SHEET 1 OF 2	INSERTION PARTS LIST DATA BASE REV			

DIGITAL EQUIPMENT CORPORATION
PARTS LIST

MADE BY / DATE	D. BILODEAU 27 JUNE 77	CHECKED / DATE	Frank Smart 9-27-77	SECTION
ENG / DATE	S Lochay 9-30-77	PROD / DATE	Mike Trujillo 9-27-77	ISSUED SECTION

ITEM NO.	DRAWING NO.	PART NO.	DESCRIPTION	QUANTITY / VARIATION M8288-Ø-Ø	NOTES: / REF DESIGNATION
19		1911469	I.C. DEC 8640	1	E46
20		1912693	I.C. DEC 25S1Ø	48	E14,E15,E27,E28,E29,E37,E38,E40,E41,E42, E43,E45,E44,E50 thru E60,E67 thru E73 E83,E84.E85,E87,E88,E89,E100 thru E104 E116,E118,E119,E134,E148,E149
21		1210711-02	HANDLE	1	
22		900CC24-01	EYE LET	12	

E.C.O. NO.

"THIS DRAWING AND SPECIFICATIONS, HEREIN, ARE THE PROPERTY OF DIGITAL EQUIPMENT CORPORATION AND SHALL NOT BE REPRODUCED OR COPIED OR USED IN WHOLE OR IN PART AS THE BASIS FOR THE MANUFACTURE OR SALE OF ITEMS WITHOUT WRITTEN PERMISSION. COPYRIGHT © DIGITAL EQUIPMENT CORPORATION"

TITLE	ASSY NO.	SIZE	CODE	NUMBER	REV.
FRACTION ADDER	D-UA-M8288-Ø-Ø	B	PL	M8288-Ø-Ø	*
	SHEET 2 OF 2	INSERTION PARTS LIST DATA BASE REV			

DRB 125

"THIS DRAWING AND SPECIFICATIONS, HEREIN, ARE THE PROPERTY OF DIGITAL EQUIPMENT CORPORATION AND SHALL NOT BE REPRODUCED OR COPIED OR USED IN WHOLE OR IN PART AS THE BASIS FOR THE MANUFACTURE OR SALE OF ITEMS WITHOUT WRITTEN PERMISSION.
COPYRIGHT © 1977, DIGITAL EQUIPMENT CORPORATION"

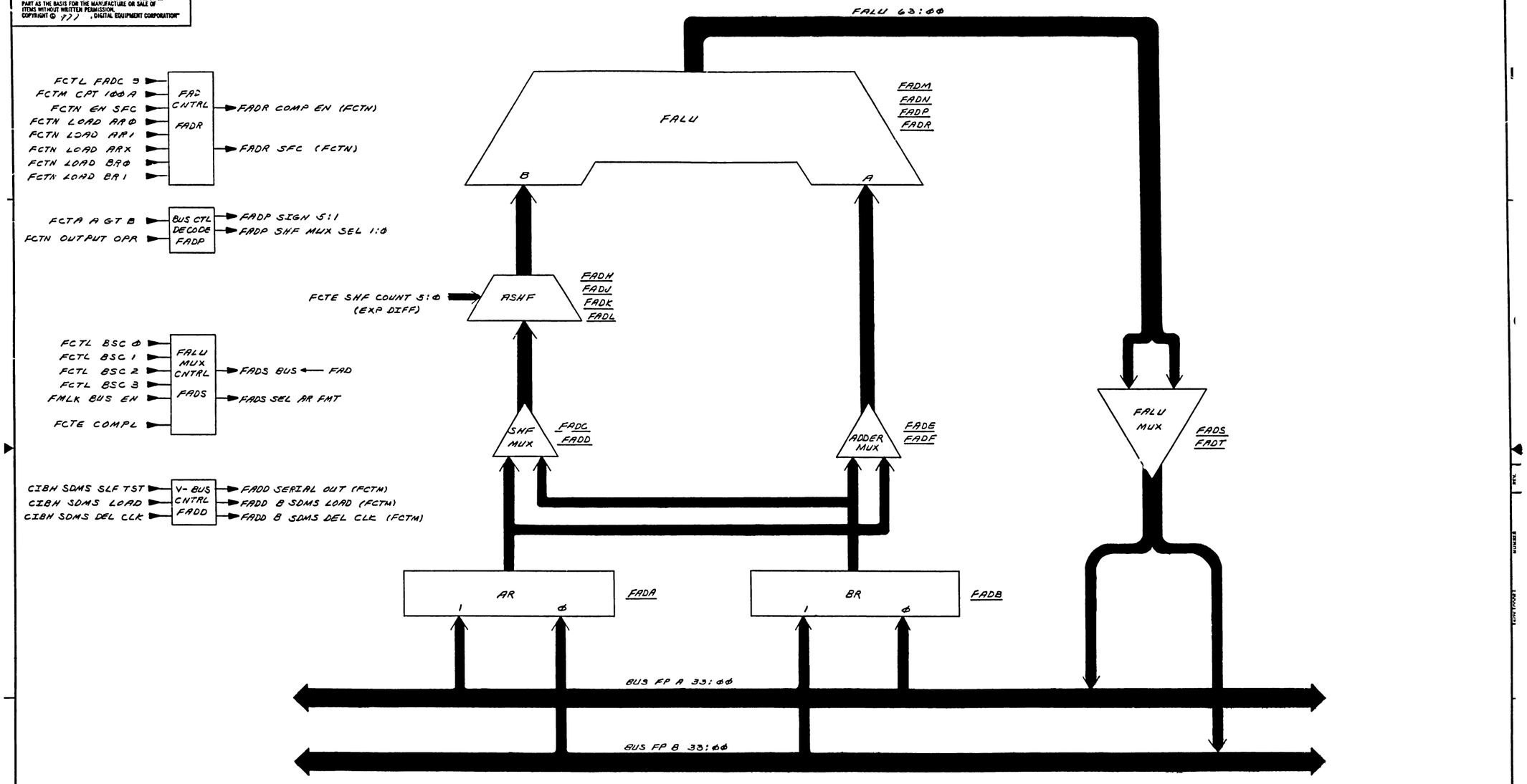

(BLOCK DIAGRAM)

DRN. Roy Jensen	9-23-77	FIRST USED ON	digital
CHK'D Fingerman	9-29-77		
ENG. Stan Lacky	9-29-77	TITLE	FRACTION ADDER
PROJ. ENG. Stanley	9-29-77		
PROD. Grant Lee	9-29-77		
NEXT HIGHER ASSY.			
SCALE		SIZE D	CODE CS	NUMBER M8288-0-1	REV. *
SHEET 1 OF 17		DIST.	

REVISIONS: REV. | CHANGE NO. | CHK

DEC FORM NO. DRD 102 D

"THIS DRAWING AND SPECIFICATIONS, HEREIN, ARE THE PROPERTY OF DIGITAL EQUIPMENT CORPORATION AND SHALL NOT BE REPRODUCED OR COPIED OR USED IN WHOLE OR IN PART AS THE BASIS FOR THE MANUFACTURE OR SALE OF ITEMS WITHOUT WRITTEN PERMISSION.
COPYRIGHT © ,1977, DIGITAL EQUIPMENT CORPORATION"

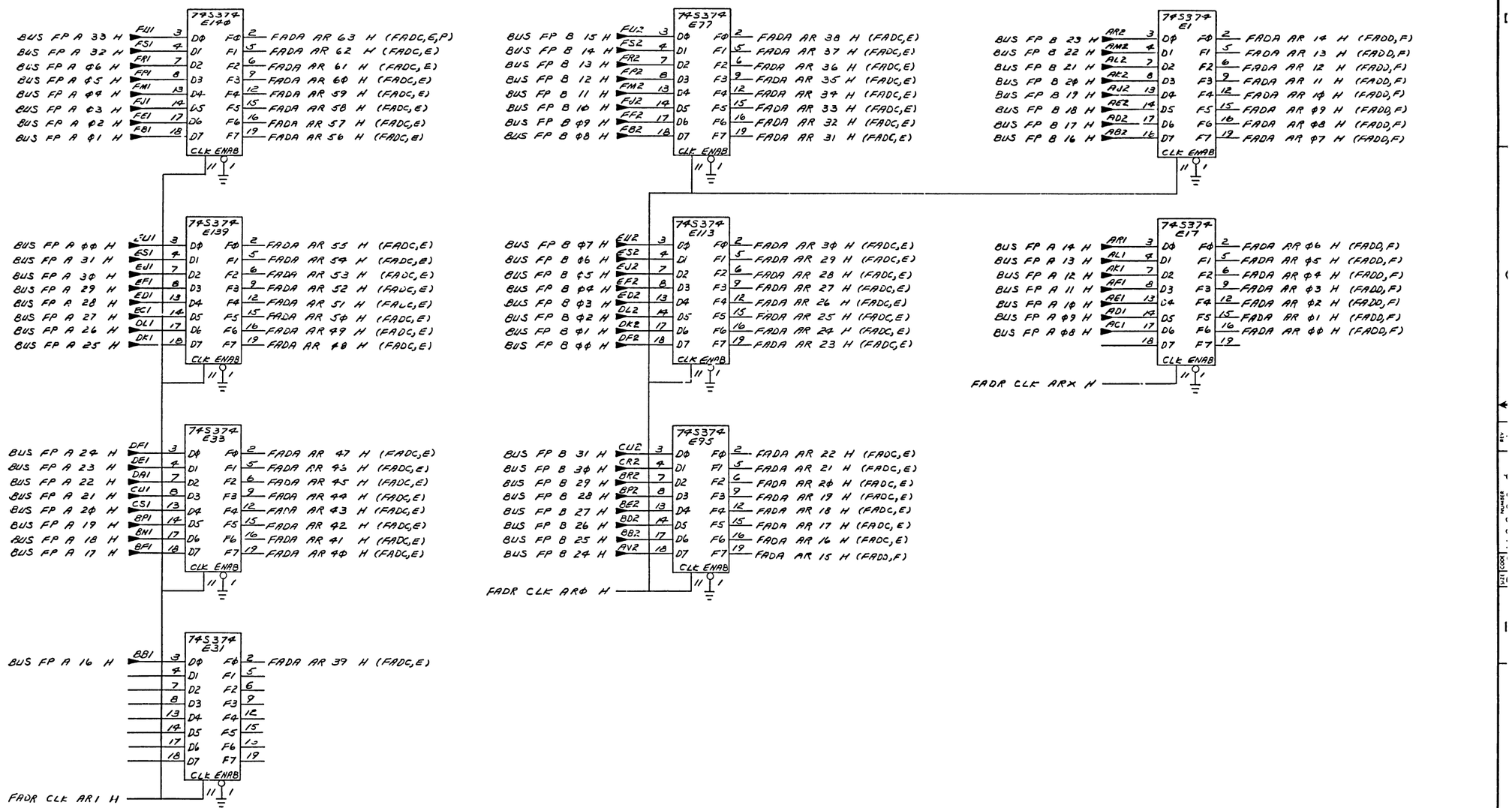

REVISIONS		
CHK	CHANGE NO.	REV

(OPERAND AR LATCH) (SLOT 27)

TITLE	SIZE	CODE	NUMBER	REV.
FRACTION ADDER (FADA)	D	CS	M8288-0-1	*
SCALE	SHEET 2 OF 17	DIST.		

DEC FORM NO. DRD 138

"THIS DRAWING AND SPECIFICATIONS, HEREIN, ARE THE PROPERTY OF DIGITAL EQUIPMENT CORPORATION AND SHALL NOT BE REPRODUCED OR COPIED OR USED IN WHOLE OR IN PART AS THE BASIS FOR THE MANUFACTURE OR SALE OF ITEMS WITHOUT WRITTEN PERMISSION.
COPYRIGHT © 1977 DIGITAL EQUIPMENT CORPORATION"

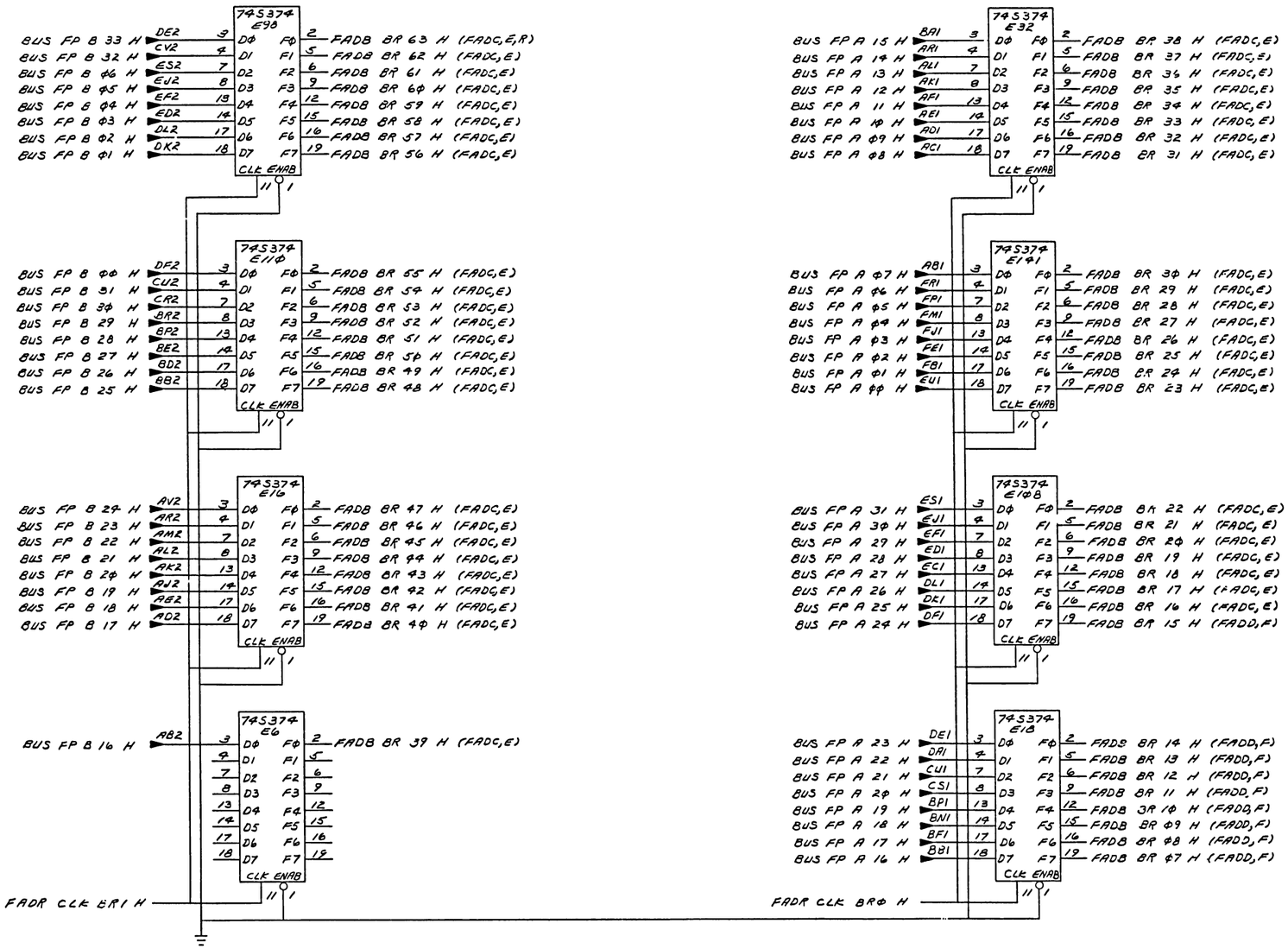

REVISIONS

CHK	CHANGE NO	REV

(OPERAND BR LATCH) (SLOT 27)

TITLE: FRACTION ADDER (FADB)
SIZE D | CODE CS | NUMBER M8288-0-1 | REV *
SCALE | SHEET 3 OF 17

DEC FORM NO. DRD 138

"THIS DRAWING AND SPECIFICATIONS, HEREIN, ARE THE PROPERTY OF DIGITAL EQUIPMENT CORPORATION AND SHALL NOT BE REPRODUCED OR COPIED OR USED IN WHOLE OR IN PART AS THE BASIS FOR THE MANUFACTURE OR SALE OF ITEMS WITHOUT WRITTEN PERMISSION.
COPYRIGHT © 1977 DIGITAL EQUIPMENT CORPORATION"

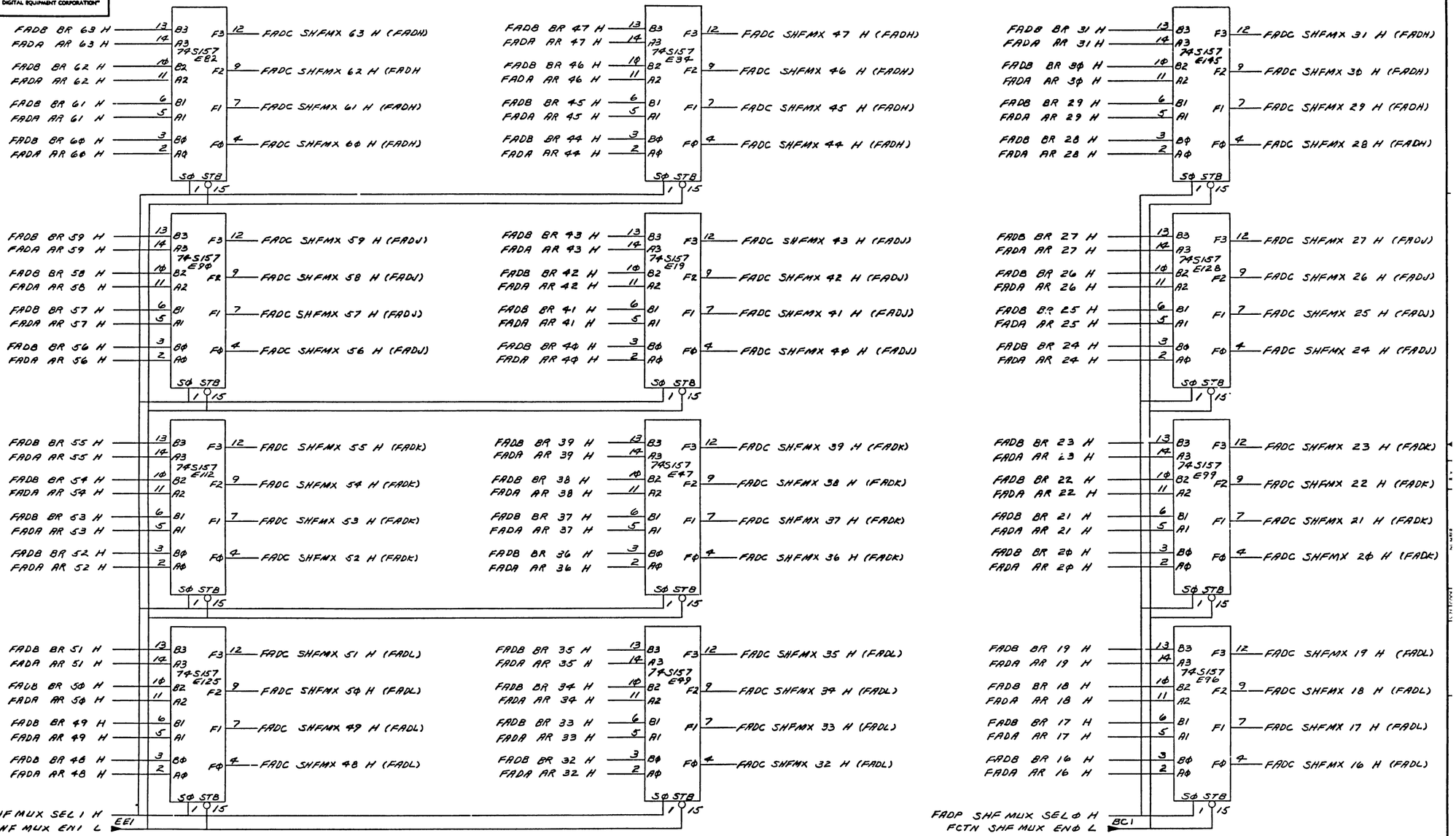

(SHIFTER INPUT SELECTOR A) (SLOT 27)

REVISIONS		
CHK	CHANGE NO	REV

TITLE	SIZE	CODE	NUMBER	REV.
FRACTION ADDER (FADC)	D	CS	M8288-0-1	*
SCALE	SHEET 4 OF 17	DIST.		

DEC FORM NO. DRD 138

"THIS DRAWING AND SPECIFICATIONS, HEREIN, ARE THE PROPERTY OF DIGITAL EQUIPMENT CORPORATION AND SHALL NOT BE REPRODUCED OR COPIED OR USED IN WHOLE OR IN PART AS THE BASIS FOR THE MANUFACTURE OR SALE OF ITEMS WITHOUT WRITTEN PERMISSION.
COPYRIGHT © '-' ,' DIGITAL EQUIPMENT CORPORATION"

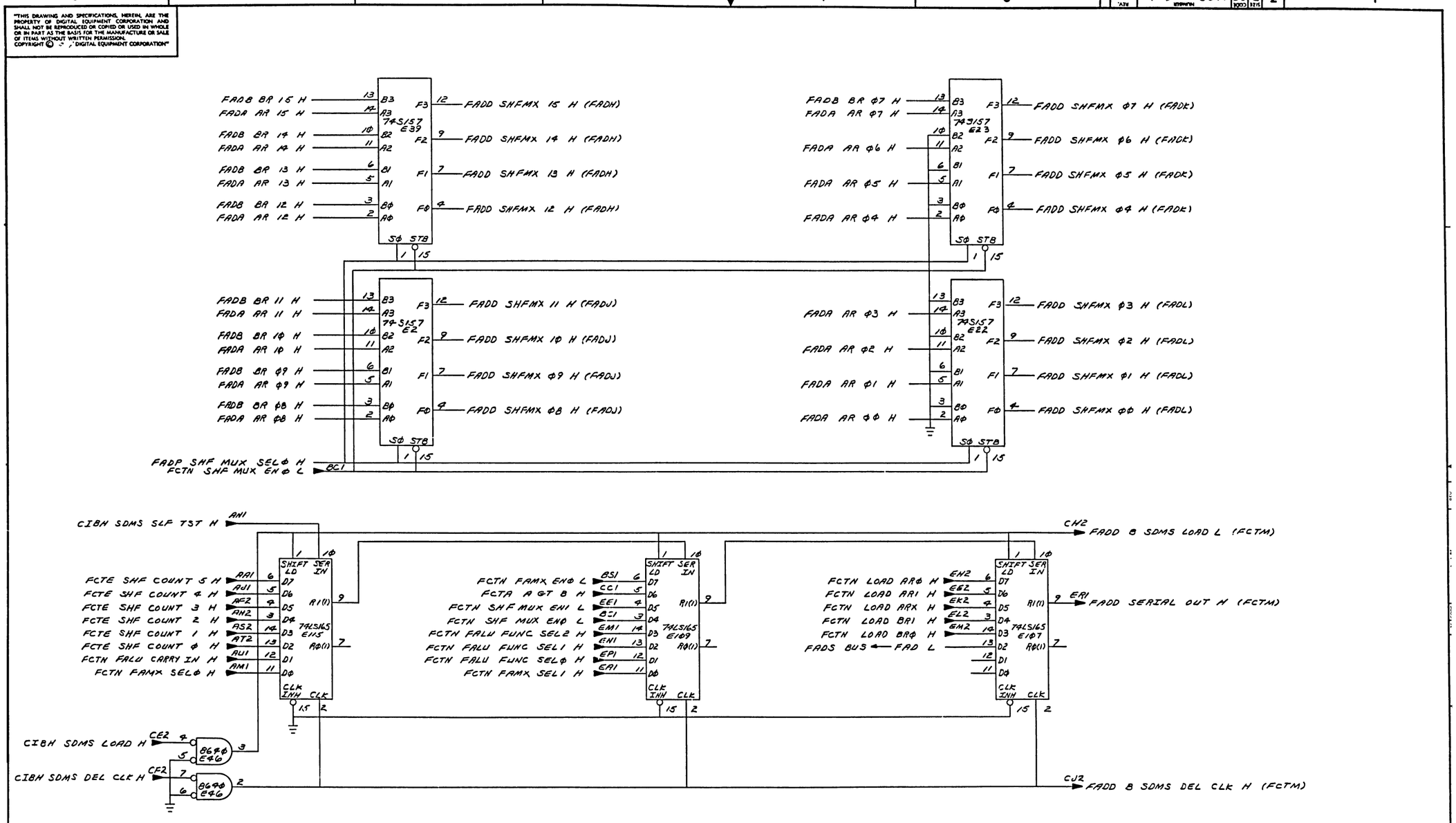

REVISIONS		
CHK	CHANGE NO.	REV.

(SHIFTER INPUT SELECTOR B) (SLOT 27)

TITLE	SIZE	CODE	NUMBER	REV.
FRACTION ADDER (FADD)	D	CS	M8288-0-1	*
SCALE	SHEET 5 OF 17	DIST.		

DEC FORM NO. DRD 130

"THIS DRAWING AND SPECIFICATIONS, HEREIN, ARE THE PROPERTY OF DIGITAL EQUIPMENT CORPORATION AND SHALL NOT BE REPRODUCED OR COPIED OR USED IN WHOLE OR IN PART AS THE BASIS FOR THE MANUFACTURE OR SALE OF ITEMS WITHOUT WRITTEN PERMISSION.
COPYRIGHT © 1977 DIGITAL EQUIPMENT CORPORATION"

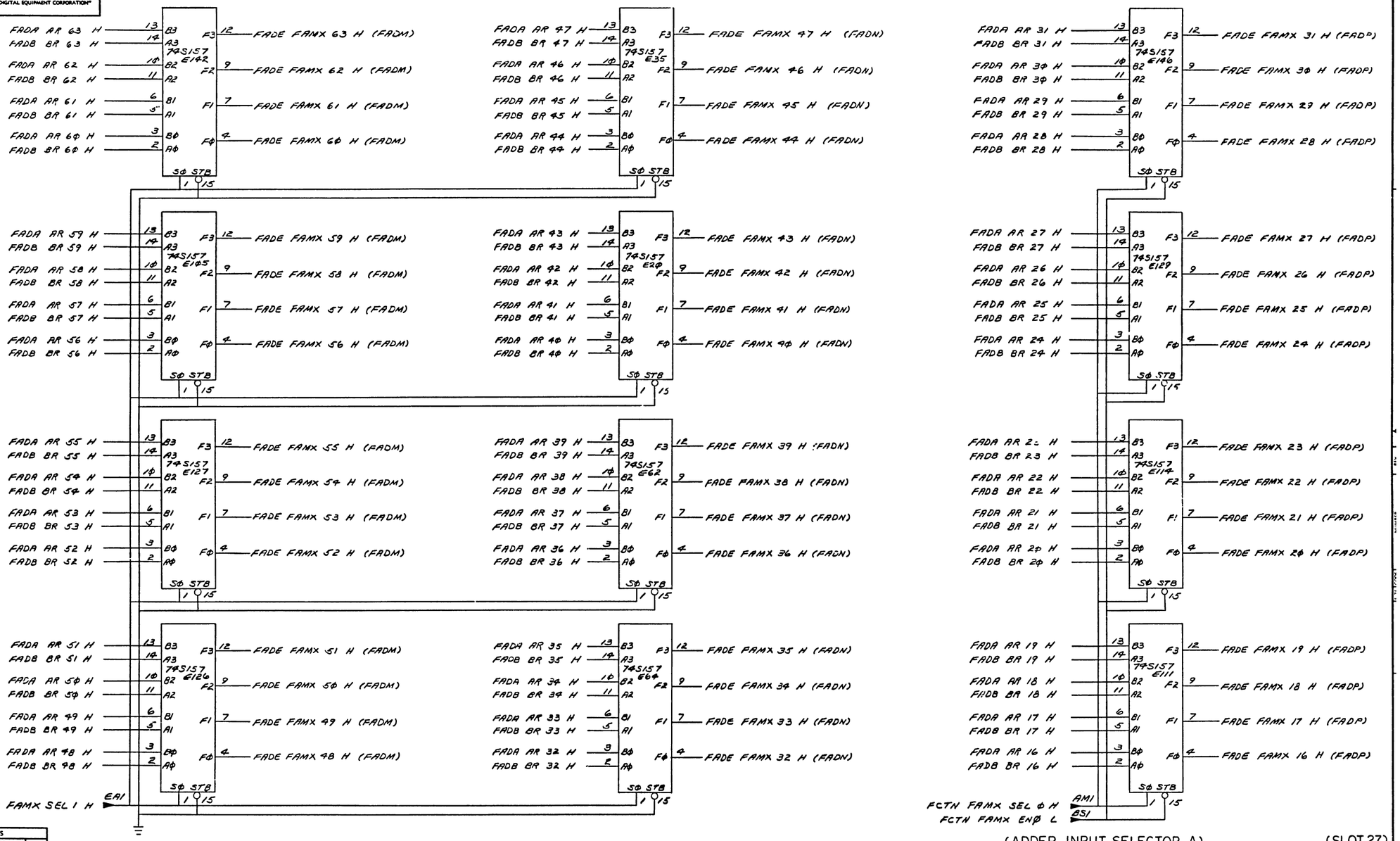

(ADDER INPUT SELECTOR A) (SLOT 27)

REVISIONS		
CHK	CHANGE NO	REV

TITLE	SIZE	CODE	NUMBER	REV.
FRACTION ADDER (FADE)	D	CS	M8288-0-1	*
SCALE	SHEET 6 OF 17		DIST.	

DEC FORM NO. DRD 138

"THIS DRAWING AND SPECIFICATIONS, HEREIN, ARE THE PROPERTY OF DIGITAL EQUIPMENT CORPORATION AND SHALL NOT BE REPRODUCED OR COPIED OR USED IN WHOLE OR IN PART AS THE BASIS FOR THE MANUFACTURE OR SALE OF ITEMS WITHOUT WRITTEN PERMISSION.
COPYRIGHT ©1977 DIGITAL EQUIPMENT CORPORATION"

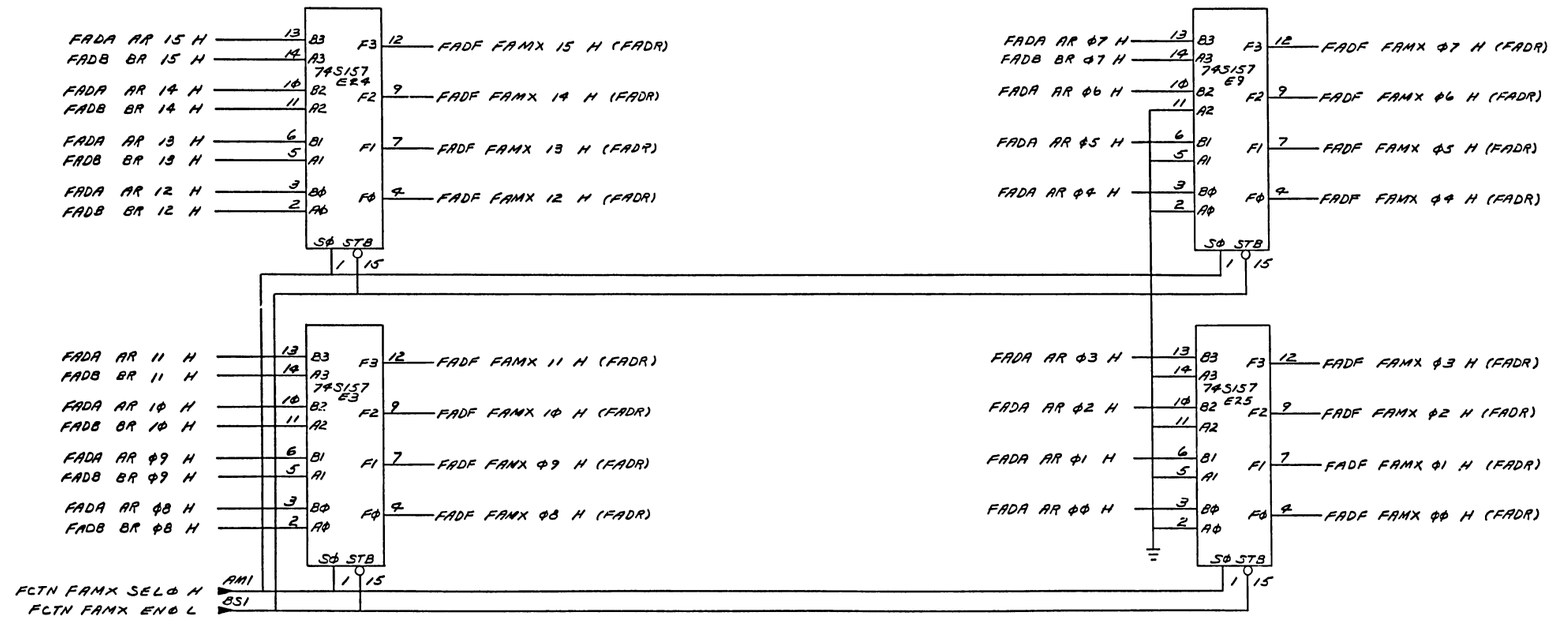

REVISIONS		
CHK	CHANGE NO.	REV.

(ADDER INPUT SELECTOR B) (SLOT 27)

TITLE	SIZE	CODE	NUMBER	REV.
FRACTION ADDER (FADF)	D	CS	M8288-0-1	*
SCALE	SHEET 7 OF 17	DIST.		

"THIS DRAWING AND SPECIFICATIONS, HEREIN, ARE THE PROPERTY OF DIGITAL EQUIPMENT CORPORATION AND SHALL NOT BE REPRODUCED OR COPIED OR USED IN WHOLE OR IN PART AS THE BASIS FOR THE MANUFACTURE OR SALE OF ITEMS WITHOUT WRITTEN PERMISSION.
COPYRIGHT © 1977 DIGITAL EQUIPMENT CORPORATION"

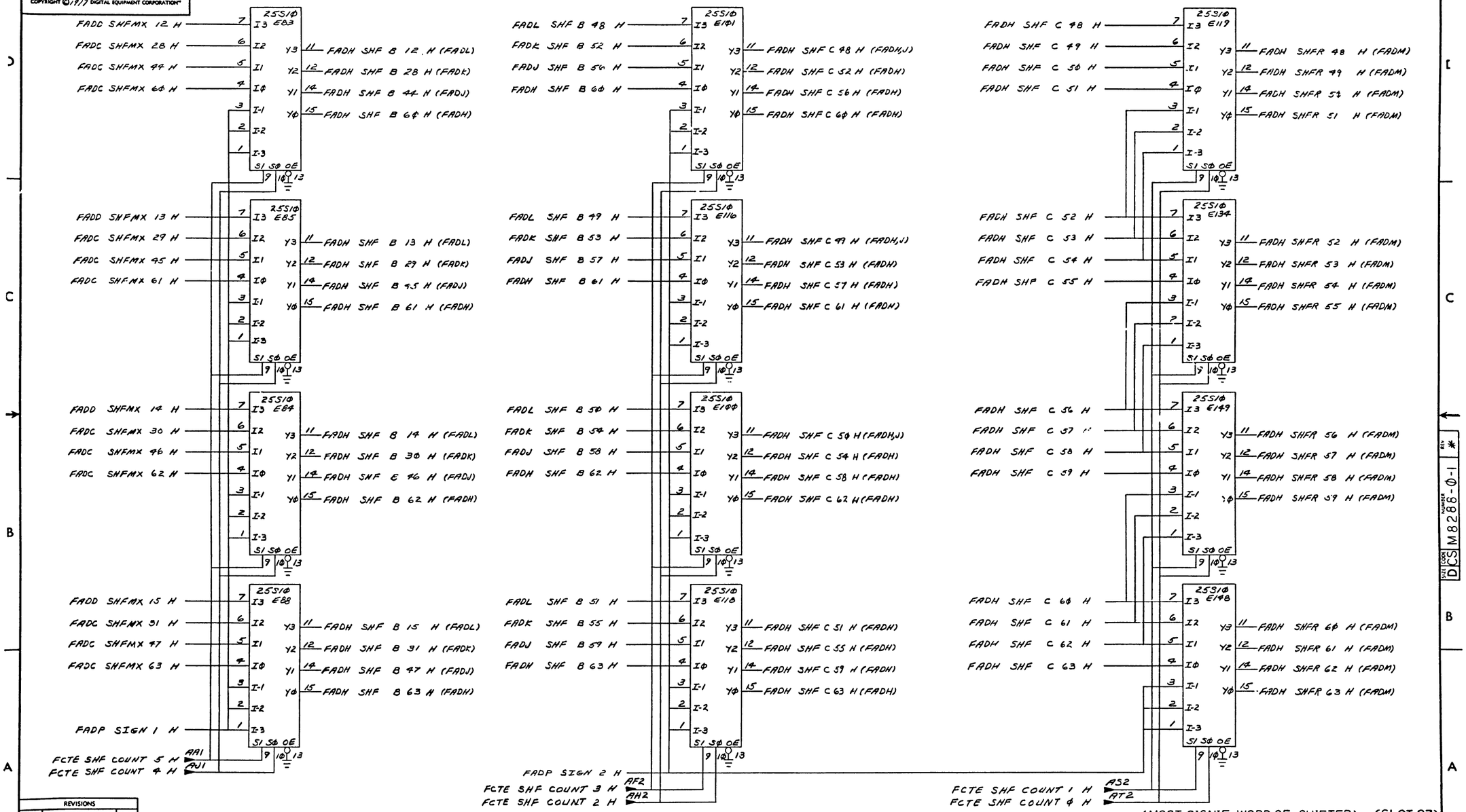

(MOST SIGNIF WORD OF SHIFTER) (SLOT 27)

REVISIONS		
CHK	CHANGE NO.	REV

TITLE	SIZE	CODE	NUMBER	REV.
FRACTION ADDER (FADH)	D	CS	M8288-Ø-1	*
SCALE	SHEET 8 OF 17		DIST.	

D.C FORM NO. DRD 138

"THIS DRAWING AND SPECIFICATIONS, HEREIN, ARE THE PROPERTY OF DIGITAL EQUIPMENT CORPORATION AND SHALL NOT BE REPRODUCED OR COPIED OR USED IN WHOLE OR IN PART AS THE BASIS FOR THE MANUFACTURE OR SALE OF ITEMS WITHOUT WRITTEN PERMISSION.
COPYRIGHT ©1977 DIGITAL EQUIPMENT CORPORATION"

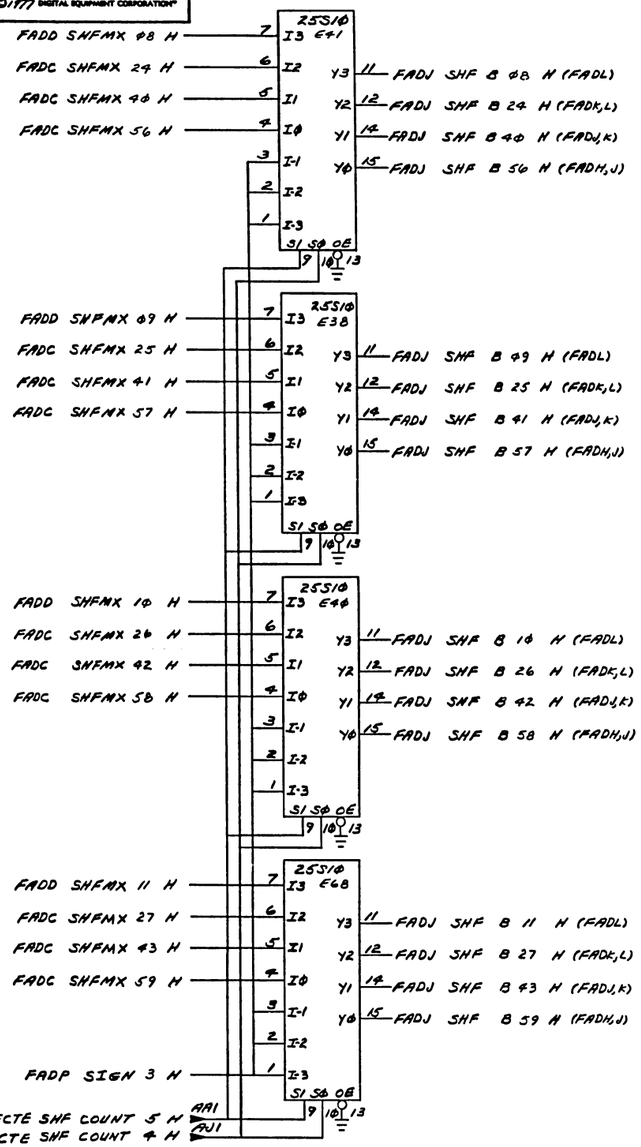

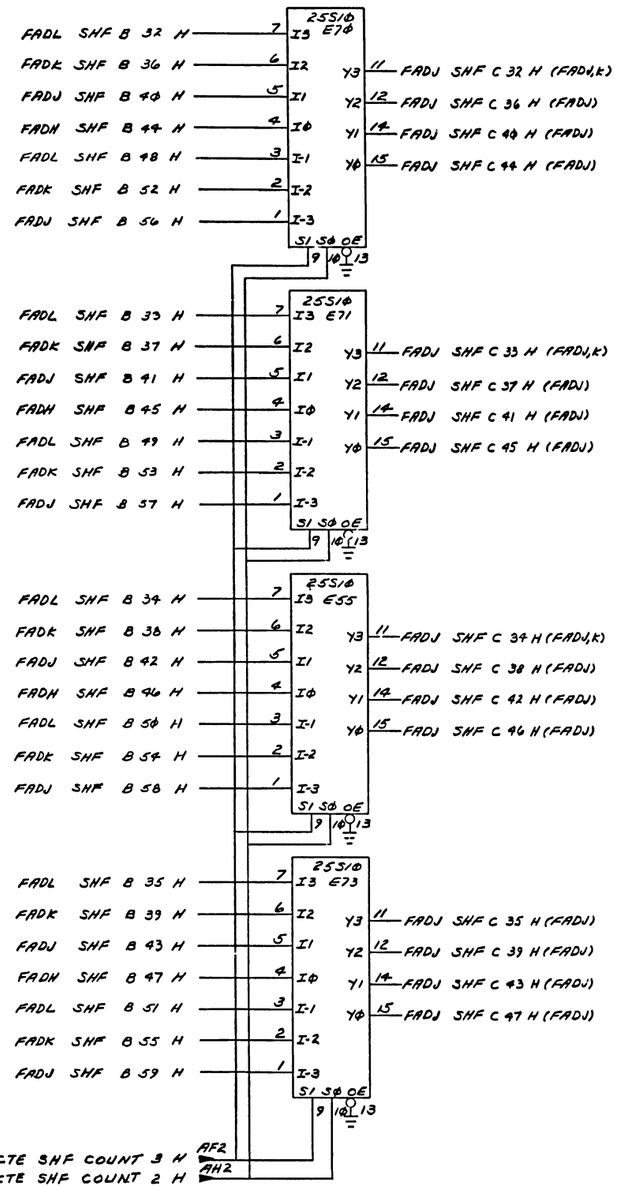

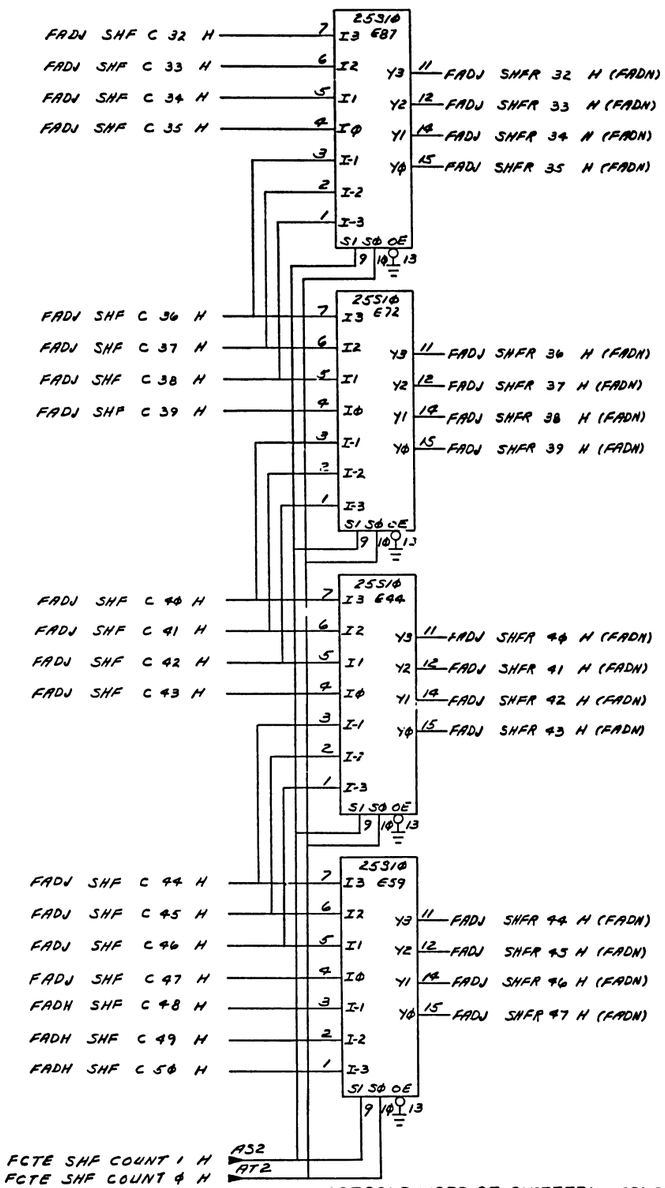

REVISIONS		
CHK	CHANGE NO.	REV

(SECOND WORD OF SHIFTER) (SLOT 27)

TITLE	SIZE	CODE	NUMBER	REV.
FRACTION ADDER (FADJ)	D	CS	M8288-0-1	*
SCALE	SHEET 9 OF 17	DIST.		

DEC FORM NO. DRD 138

"THIS DRAWING AND SPECIFICATIONS, HEREIN, ARE THE PROPERTY OF DIGITAL EQUIPMENT CORPORATION AND SHALL NOT BE REPRODUCED OR COPIED OR USED IN WHOLE OR IN PART AS THE BASIS FOR THE MANUFACTURE OR SALE OF ITEMS WITHOUT WRITTEN PERMISSION.
COPYRIGHT © 1977 DIGITAL EQUIPMENT CORPORATION"

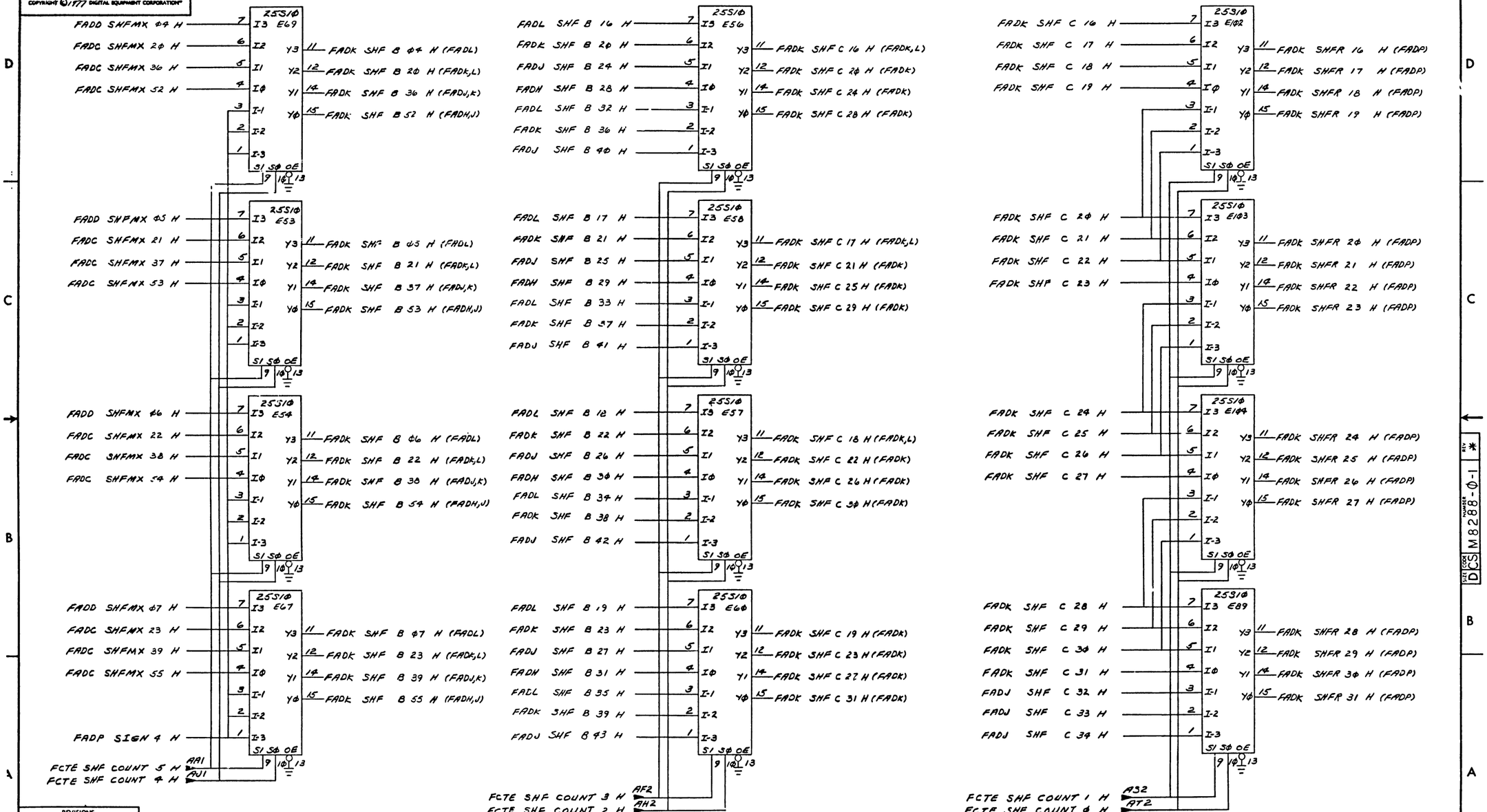

(THIRD WORD OF SHIFTER) (SLOT 27)

REVISIONS		
CHK	CHANGE NO.	REV.

TITLE	SIZE	CODE	NUMBER	REV.
FRACTION ADDER (FADK)	D	CS	M8288-Ø-1	*
SCALE	SHEET 10 OF 17	DIST.		

DEC FORM NO. DRD 138

M8288-Ø-1 * D CS

"THIS DRAWING AND SPECIFICATIONS, HEREIN, ARE THE PROPERTY OF DIGITAL EQUIPMENT CORPORATION AND SHALL NOT BE REPRODUCED OR COPIED OR USED IN WHOLE OR IN PART AS THE BASIS FOR THE MANUFACTURE OR SALE OF ITEMS WITHOUT WRITTEN PERMISSION.
COPYRIGHT © 1977 DIGITAL EQUIPMENT CORPORATION"

2551Ø E50

FADD SHFMX ØØ H → I3
FADC SHFMX 16 H → I2
FADC SHFMX 32 H → I1
FADC SHFMX 48 H → IØ
I-1, I-2, I-3
S1 SØ OE
Y3 → FADL SHF B ØØ H (FADL)
Y2 → FADL SHF B 16 H (FADK,L)
Y1 → FADL SHF B 32 H (FADJ,K)
YØ → FADL SHF B 48 H (FADH,J)

2551Ø E51

FADD SHFMX Ø1 H → I3
FADC SHFMX 17 H → I2
FADC SHFMX 33 H → I1
FADC SHFMX 49 H → IØ
I-1, I-2, I-3
S1 SØ OE
Y3 → FADL SHF B Ø1 H (FADL)
Y2 → FADL SHF B 17 H (FADK,L)
Y1 → FADL SHF B 33 H (FADJ,K)
YØ → FADL SHF B 49 H (FADH,J)

2551Ø E37

FADD SHFMX Ø2 H → I3
FADC SHFMX 18 H → I2
FADC SHFMX 34 H → I1
FADC SHFMX 5Ø H → IØ
I-1, I-2, I-3
S1 SØ OE
Y3 → FADL SHF B Ø2 H (FADL)
Y2 → FADL SHF B 18 H (FADK,L)
Y1 → FADL SHF B 34 H (FADJ,K)
YØ → FADL SHF B 5Ø H (FADH,J)

2551Ø E52

FADD SHFMX Ø3 H → I3
FADC SHFMX 19 H → I2
FADC SHFMX 35 H → I1
FADC SHFMX 51 H → IØ
FADP SIGN 5 H → I-3
I-1, I-2
S1 SØ OE
Y3 → FADL SHF B Ø3 H (FADL)
Y2 → FADL SHF B 19 H (FADK,L)
Y1 → FADL SHF B 35 H (FADJ,K)
YØ → FADL SHF B 51 H (FADH,J)

FCTE SHF COUNT 5 H → AA1
FCTE SHF COUNT 4 H → AJ1

2551Ø E27

FADL SHF B ØØ H → I3
FADK SHF B Ø4 H → I2
FADJ SHF B Ø8 H → I1
FADH SHF B 12 H → IØ
FADL SHF B 16 H → I-1
FADK SHF B 2Ø H → I-2
FADJ SHF B 24 H → I-3
I-3
S1 SØ OE
Y3 → FADL SHF C ØØ H (FADL)
Y2 → FADL SHF C Ø4 H (FADL)
Y1 → FADL SHF C Ø8 H (FADL)
YØ → FADL SHF C 12 H (FADL)

2551Ø E43

FADL SHF B Ø1 H → I3
FADK SHF B Ø5 H → I2
FADJ SHF B Ø9 H → I1
FADH SHF B 13 H → IØ
FADL SHF B 17 H → I-1
FADK SHF B 21 H → I-2
FADJ SHF B 25 H → I-3
I-3
S1 SØ OE
Y3 → FADL SHF C Ø1 H (FADL)
Y2 → FADL SHF C Ø5 H (FADL)
Y1 → FADL SHF C Ø9 H (FADL)
YØ → FADL SHF C 13 H (FADL)

2551Ø E42

FADL SHF B Ø2 H → I3
FADK SHF B Ø6 H → I2
FADJ SHF B 1Ø H → I1
FADH SHF B 14 H → IØ
FADL SHF B 18 H → I-1
FADK SHF B 22 H → I-2
FADJ SHF B 26 H → I-3
I-3
S1 SØ OE
Y3 → FADL SHF C Ø2 H (FADL)
Y2 → FADL SHF C Ø6 H (FADL)
Y1 → FADL SHF C 1Ø H (FADL)
YØ → FADL SHF C 14 H (FADL)

2551Ø E45

FADL SHF B Ø3 H → I3
FADK SHF B Ø7 H → I2
FADJ SHF B 11 H → I1
FADH SHF B 15 H → IØ
FADL SHF B 19 H → I-1
FADK SHF B 23 H → I-2
FADJ SHF B 27 H → I-3
I-3
S1 SØ OE
Y3 → FADL SHF C Ø3 H (FADL)
Y2 → FADL SHF C Ø7 H (FADL)
Y1 → FADL SHF C 11 H (FADL)
YØ → FADL SHF C 15 H (FADL)

FCTE SHF COUNT 3 H → AF2
FCTE SHF COUNT 2 H → AH2

2551Ø E28

FADL SHF C ØØ H → I3
FADL SHF C Ø1 H → I2
FADL SHF C Ø2 H → I1
FADL SHF C Ø3 H → IØ
I-1, I-2, I-3
S1 SØ OE
Y3 → FADL SHFR ØØ H (FADR)
Y2 → FADL SHFR Ø1 H (FADR)
Y1 → FADL SHFR Ø2 H (FADR)
YØ → FADL SHFR Ø3 H (FADR)

2551Ø E14

FADL SHF C Ø4 H → I3
FADL SHF C Ø5 H → I2
FADL SHF C Ø6 H → I1
FADL SHF C Ø7 H → IØ
I-1, I-2, I-3
S1 SØ OE
Y3 → FADL SHFR Ø4 H (FADR)
Y2 → FADL SHFR Ø5 H (FADR)
Y1 → FADL SHFR Ø6 H (FADR)
YØ → FADL SHFR Ø7 H (FADR)

2551Ø E15

FADL SHF C Ø8 H → I3
FADL SHF C Ø9 H → I2
FADL SHF C 1Ø H → I1
FADL SHF C 11 H → IØ
I-1, I-2, I-3
S1 SØ OE
Y3 → FADL SHFR Ø8 H (FADR)
Y2 → FADL SHFR Ø9 H (FADR)
Y1 → FADL SHFR 1Ø H (FADR)
YØ → FADL SHFR 11 H (FADR)

2551Ø E29

FADL SHF C 12 H → I3
FADL SHF C 13 H → I2
FADL SHF C 14 H → I1
FADL SHF C 15 H → IØ
FADK SHF C 16 H → I-1
FADK SHF C 17 H → I-2
FADK SHF C 18 H → I-3
I-3
S1 SØ OE
Y3 → FADL SHFR 12 H (FADR)
Y2 → FADL SHFR 13 H (FADR)
Y1 → FADL SHFR 14 H (FADR)
YØ → FADL SHFR 15 H (FADR)

FCTE SHF COUNT 1 H → AJ32
FCTE SHF COUNT Ø H → AJ2

(LEAST SIGNIFICANT WORD OF SHIFTER) (SLOT 27)

REVISIONS		
CHK	CHANGE NO	REV

TITLE	SIZE	CODE	NUMBER	REV.
FRACTION ADDER (FADL)	D	CS	M8288-Ø-1	*
SCALE	SHEET 11 OF 17	DIST.		

DEC FORM NO. DRD 138

8 7 6 5 4 3 2 1

"THIS DRAWING AND SPECIFICATIONS, HEREIN, ARE THE PROPERTY OF DIGITAL EQUIPMENT CORPORATION AND SHALL NOT BE REPRODUCED OR COPIED OR USED IN WHOLE OR IN PART AS THE BASIS FOR THE MANUFACTURE OR SALE OF ITEMS WITHOUT WRITTEN PERMISSION
COPYRIGHT © 1977 DIGITAL EQUIPMENT CORPORATION"

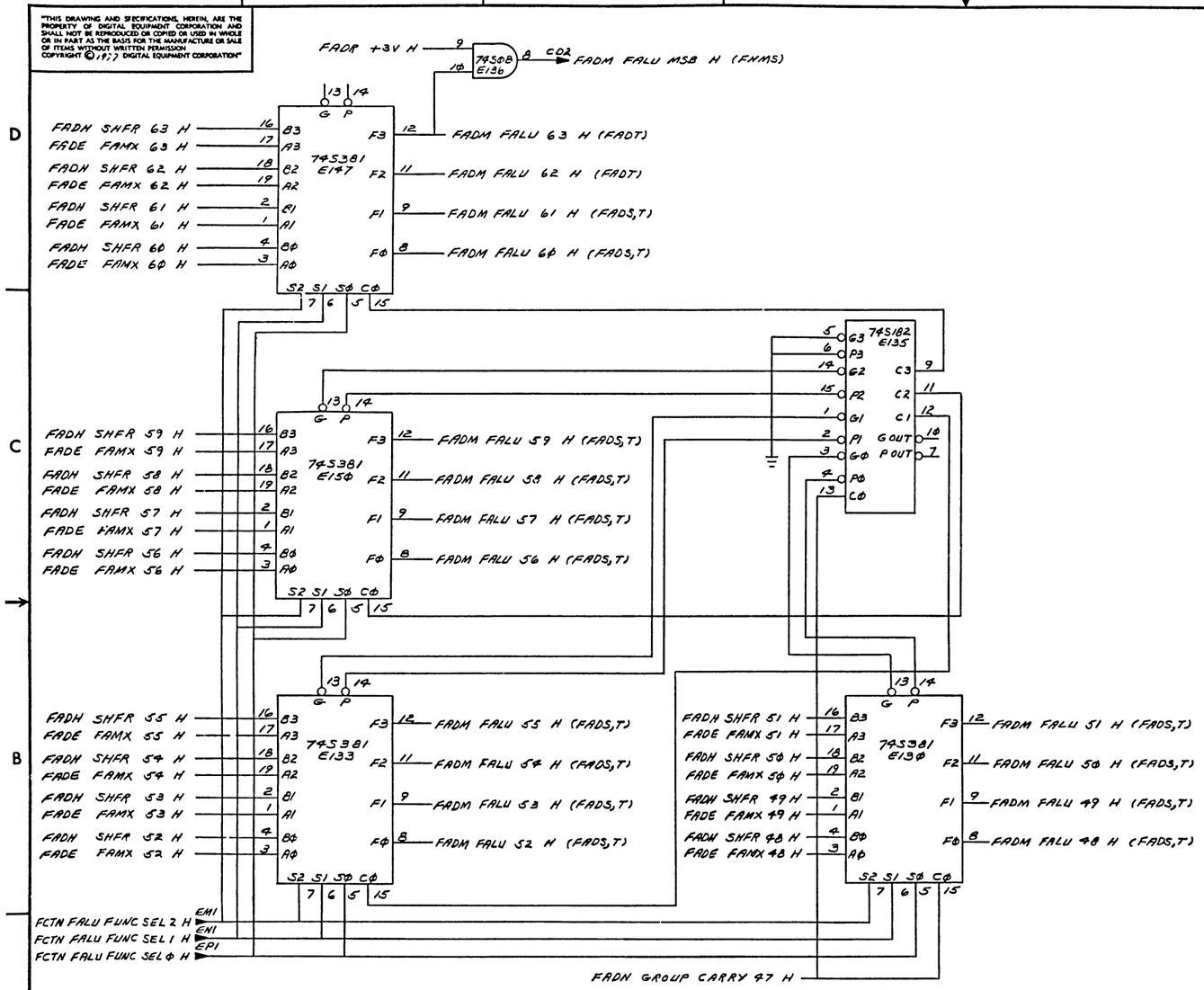

74S381 FUNCTIONS

S_2	S_1	S_0	F
0	0	0	CLEAR
0	0	1	B-A ①
0	1	0	A-B ①
0	1	1	A+B
1	0	0	A EXOR B
1	0	1	A OR B
1	1	0	A AND B
1	1	1	SET

① REQUIRES CARRY-IN OF HIGH LEVEL

REVISIONS		
CHK	CHANGE NO.	REV.

(MOST SIGNIFICANT WORD OF ALU) (SLOT 27)

TITLE	SIZE	CODE	NUMBER	REV.
FRACTION ADDER (FADM)	D	CS	M8288-0-1	*
SCALE	SHEET 12 OF 17	DIST		

M8288-0-1 REV * SIZE D CODE CS NUMBER M8288-0-1

"THIS DRAWING AND SPECIFICATIONS, HEREIN, ARE THE PROPERTY OF DIGITAL EQUIPMENT CORPORATION AND SHALL NOT BE REPRODUCED OR COPIED OR USED IN WHOLE OR IN PART AS THE BASIS FOR THE MANUFACTURE OR SALE OF ITEMS WITHOUT WRITTEN PERMISSION.
COPYRIGHT © 1977 DIGITAL EQUIPMENT CORPORATION"

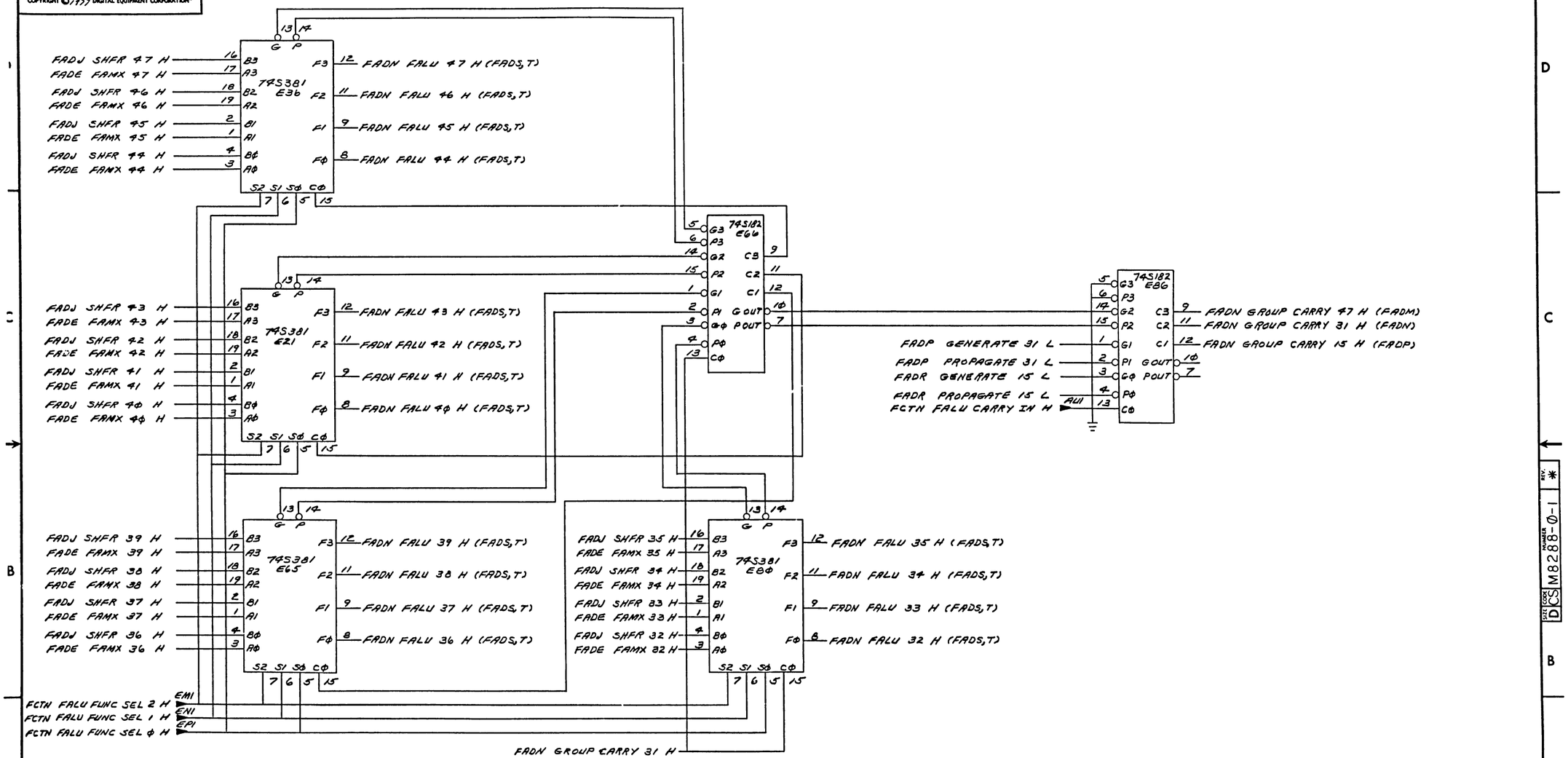

REVISIONS		
CHK	CHANGE NO.	REV.

(SECOND WORD OF ALU) (SLOT 27)

TITLE	SIZE	CODE	NUMBER	REV.
FRACTION ADDER (FADN)	D	CS	M8288-0-1	*
SCALE ⟷	SHEET 13 OF 17	DIST.		

"THIS DRAWING AND SPECIFICATIONS, HEREIN, ARE THE PROPERTY OF DIGITAL EQUIPMENT CORPORATION AND SHALL NOT BE REPRODUCED OR COPIED OR USED IN WHOLE OR IN PART AS THE BASIS FOR THE MANUFACTURE OR SALE OF ITEMS WITHOUT WRITTEN PERMISSION.
COPYRIGHT © 1977 DIGITAL EQUIPMENT CORPORATION"

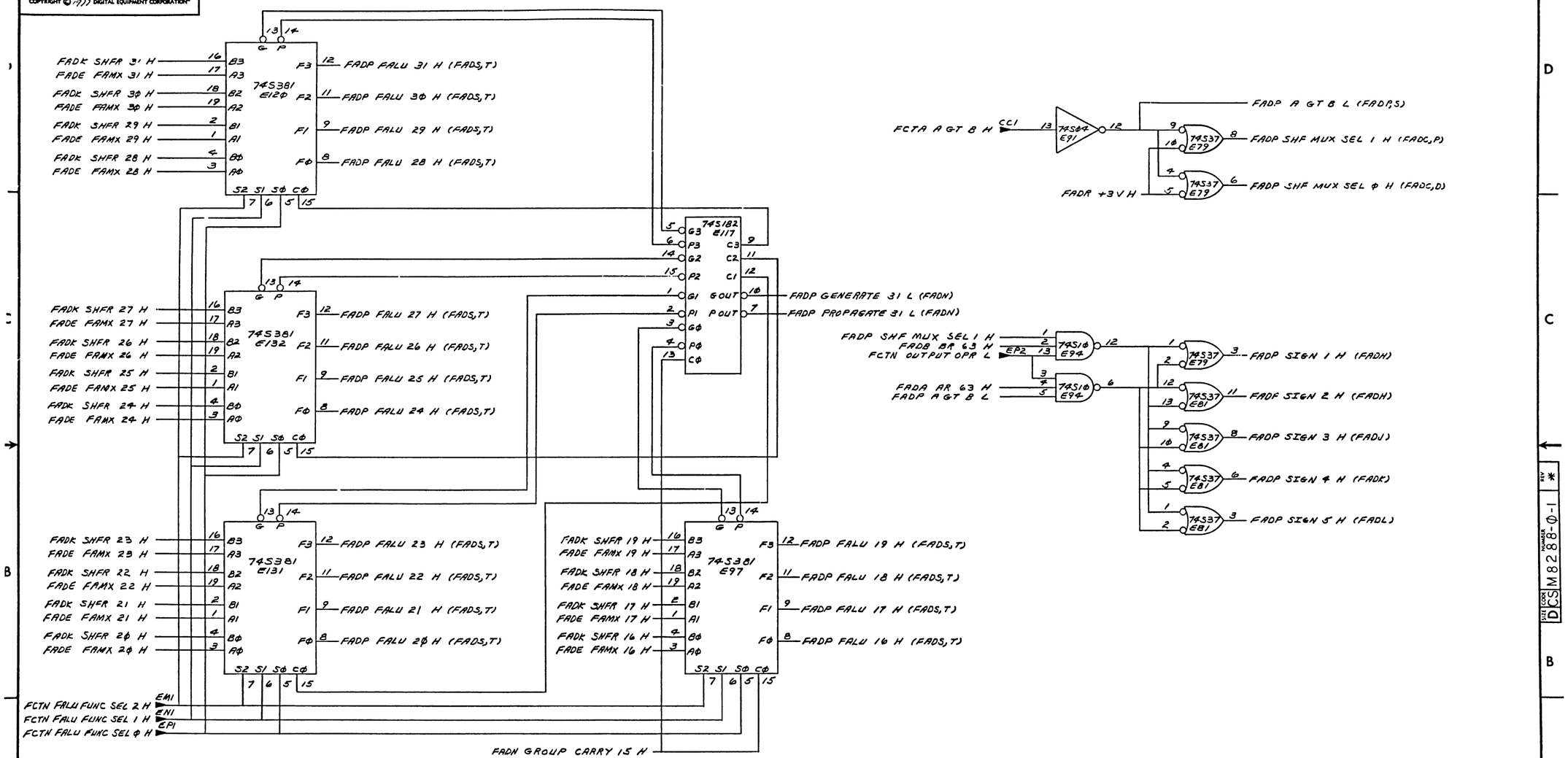

REVISIONS		
CHK	CHANGE NO.	REV.

(THIRD WORD OF ALU & BUS CONTROL DECODER) (SLOT 27)

TITLE	SIZE	CODE	NUMBER	REV.
FRACTION ADDER (FADP)	D	CS	M8288-0-1	*
SCALE	SHEET 14 OF 17		DIST.	

"THIS DRAWING AND SPECIFICATIONS, HEREIN, ARE THE PROPERTY OF DIGITAL EQUIPMENT CORPORATION AND SHALL NOT BE REPRODUCED OR COPIED OR USED IN WHOLE OR IN PART AS THE BASIS FOR THE MANUFACTURE OR SALE OF ITEMS WITHOUT WRITTEN PERMISSION.
COPYRIGHT © 1977 DIGITAL EQUIPMENT CORPORATION"

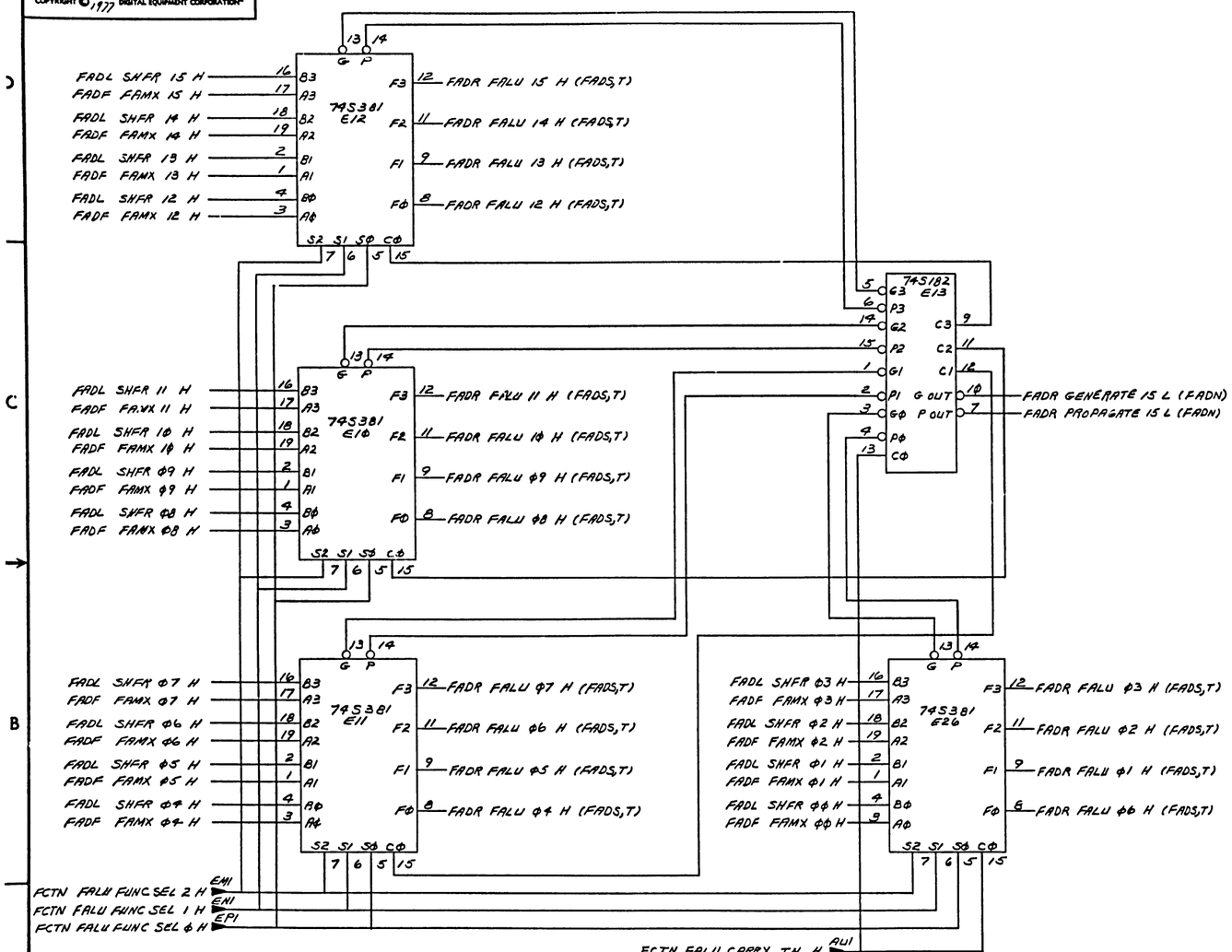

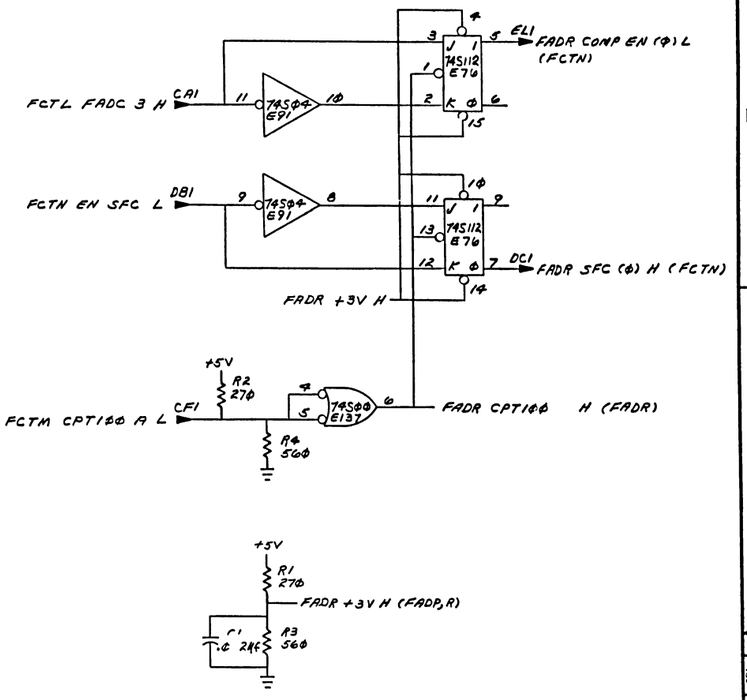

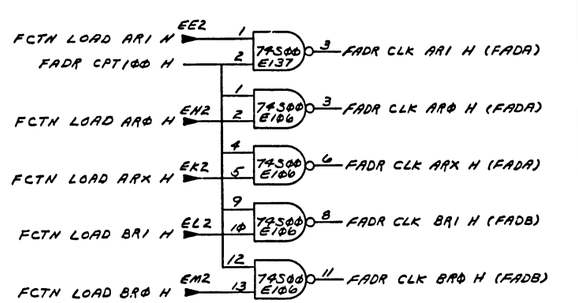

REVISIONS		
CHK	CHANGE NO.	REV.

(LEAST SIGNIFICANT WORD OF ALU) (SLOT 27)

TITLE	SIZE	CODE	NUMBER	REV.
FRACTION ADDER (FADR)	D	CS	M8288-0-1	*
SCALE	SHEET 15 OF 17	DIST.		

"THIS DRAWING AND SPECIFICATIONS, HEREIN, ARE THE PROPERTY OF DIGITAL EQUIPMENT CORPORATION AND SHALL NOT BE REPRODUCED OR COPIED OR USED IN WHOLE OR IN PART AS THE BASIS FOR THE MANUFACTURE OR SALE OF ITEMS WITHOUT WRITTEN PERMISSION.
COPYRIGHT © 1977 DIGITAL EQUIPMENT CORPORATION"

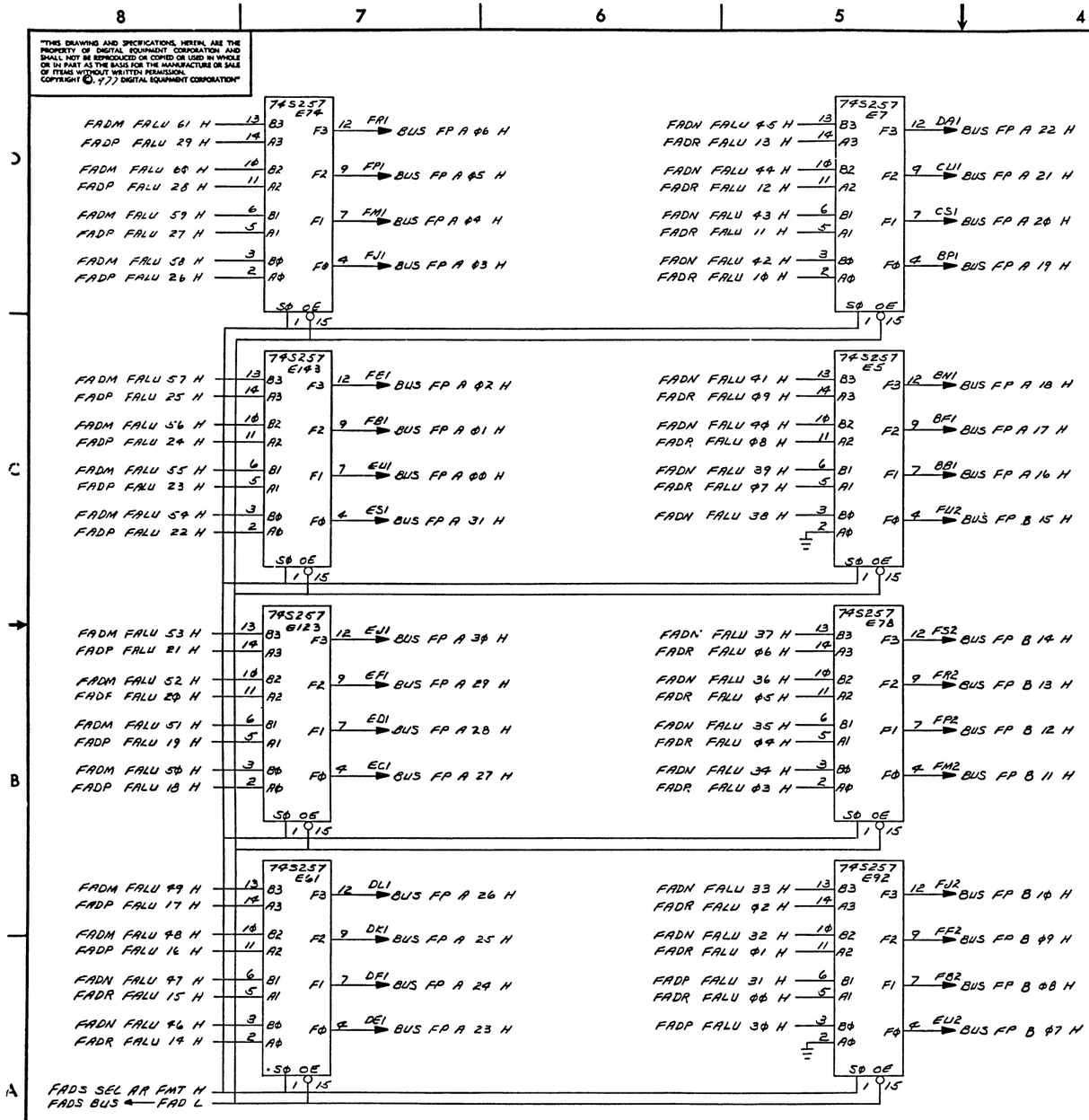

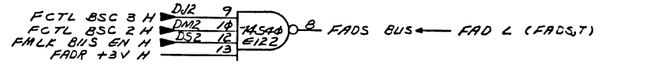

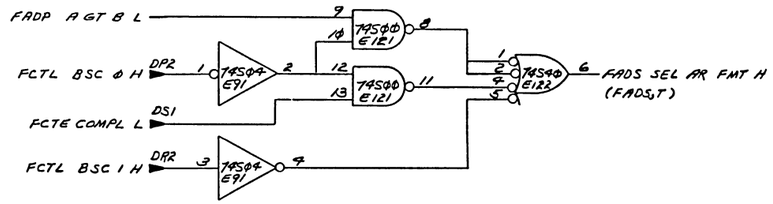

BSC	FUNCTION
C	IF A<B: BUS A ← FALU H; BUS B ← FALU L IF A>B: BUS A ← FALU L; BUS B ← FALU H
D	BUS A ← FALU L BUS B ← FALU H
E	BUS A ← FALU H BUS B ← FALU L

REVISIONS		
CHK	CHANGE NO.	REV.

(FALU MUX & BUS CONTROL) (SLOT 27)

TITLE	SIZE	CODE	NUMBER	REV.
FRACTION ADDER (FADS)	D	CS	M8288-Ø-1	*
SCALE	SHEET 16 OF 17			

M8288-Ø-1 REV *

"THIS DRAWING AND SPECIFICATIONS, HEREIN, ARE THE PROPERTY OF DIGITAL EQUIPMENT CORPORATION AND SHALL NOT BE REPRODUCED OR COPIED OR USED IN WHOLE OR IN PART AS THE BASIS FOR THE MANUFACTURE OR SALE OF ITEMS WITHOUT WRITTEN PERMISSION.
COPYRIGHT ©1977 DIGITAL EQUIPMENT CORPORATION"

74S257 E75
FADP FALU 29 H → 13 B3
FADM FALU 61 H → 14 A3
FADP FALU 28 H → 10 B2
FADM FALU 60 H → 11 A2
FADP FALU 27 H → 6 B1
FADM FALU 59 H → 5 A1
FADP FALU 26 H → 3 B0
FADM FALU 58 H → 2 A0
S0 OE → 1, 15
F3 → 12 ES2 → BUS FP B 06 H
F2 → 9 EJ2 → BUS FP B 05 H
F1 → 7 EF2 → BUS FP B 04 H
F0 → 4 ED2 → BUS FP B 03 H

74S257 E8
FADR FALU 13 H → 13 B3
FADN FALU 45 H → 14 A3
FADR FALU 12 H → 10 B2
FADN FALU 44 H → 11 A2
FADR FALU 11 H → 6 B1
FADN FALU 43 H → 5 A1
FADR FALU 10 H → 3 B0
FADN FALU 42 H → 2 A0
S0 OE → 1, 15
F3 → 12 AM2 → BUS FP B 22 H
F2 → 9 AL2 → BUS FP B 21 H
F1 → 7 AK2 → BUS FP B 20 H
F0 → 4 AJ2 → BUS FP B 19 H

74S257 6138
FADM FALU 63 H → 13 B3, 14 A3
FADM FALU 62 H → 10 B2, 11 A2, 6 B1, 5 A1, 3 B0, 2 A0
S0 OE → 1, 15
F3 → 12 FW1 → BUS FP A 33 H
F2 → 9 FS1 → BUS FP A 32 H
F1 → 7 DE2 → BUS FP B 33 H
F0 → 4 CV2 → BUS FP B 32 H

74S257 E144
FADP FALU 25 H → 13 B3
FADM FALU 57 H → 14 A3
FADP FALU 24 H → 10 B2
FADM FALU 56 H → 11 A2
FADP FALU 23 H → 6 B1
FADM FALU 55 H → 5 A1
FADP FALU 22 H → 3 B0
FADM FALU 54 H → 2 A0
S0 OE → 1, 15
F3 → 12 DL2 → BUS FP B 02 H
F2 → 9 DK2 → BUS FP B 01 H
F1 → 7 DF2 → BUS FP B 00 H
F0 → 4 CV2 → BUS FP B 31 H

74S257 E4
FADR FALU 09 H → 13 B3
FADN FALU 41 H → 14 A3
FADR FALU 08 H → 10 B2
FADN FALU 40 H → 11 A2
FADR FALU 07 H → 6 B1
FADN FALU 39 H → 5 A1
FADN FALU 38 H → 3 B0, 2 A0
S0 OE → 1, 15
F3 → 12 AE2 → BUS FP B 18 H
F2 → 9 AD2 → BUS FP B 17 H
F1 → 7 AB2 → BUS FP B 16 H
F0 → 4 BA1 → BUS FP A 15 H

74S257 E124
FADP FALU 21 H → 13 B3
FADM FALU 53 H → 14 A3
FADP FALU 20 H → 10 B2
FADM FALU 52 H → 11 A2
FADP FALU 19 H → 6 B1
FADM FALU 51 H → 5 A1
FADP FALU 18 H → 3 B0
FADM FALU 50 H → 2 A0
S0 OE → 1, 15
F3 → 12 CR2 → BUS FP B 30 H
F2 → 9 BR2 → BUS FP B 29 H
F1 → 7 BP2 → BUS FP B 28 H
F0 → 4 BE2 → BUS FP B 27 H

74S257 E48
FADR FALU 06 H → 13 B3
FADN FALU 37 H → 14 A3
FADR FALU 05 H → 10 B2
FADN FALU 36 H → 11 A2
FADR FALU 04 H → 6 B1
FADN FALU 35 H → 5 A1
FADR FALU 03 H → 3 B0
FADN FALU 34 H → 2 A0
S0 OE → 1, 15
F3 → 12 AR1 → BUS FP A 14 H
F2 → 9 AL1 → BUS FP A 13 H
F1 → 7 AK1 → BUS FP A 12 H
F0 → 4 AE1 → BUS FP A 11 H

74S257 E63
FADP FALU 17 H → 13 B3
FADM FALU 49 H → 14 A3
FADP FALU 16 H → 10 B2
FADM FALU 48 H → 11 A2
FADR FALU 15 H → 6 B1
FADN FALU 47 H → 5 A1
FADR FALU 14 H → 3 B0
FADN FALU 46 H → 2 A0
S0 OE → 1, 15
F3 → 12 BD2 → BUS FP B 26 H
F2 → 9 BB2 → BUS FP B 25 H
F1 → 7 AV2 → BUS FP B 24 H
F0 → 4 AR2 → BUS FP B 23 H

74S257 E93
FADR FALU 02 H → 13 B3
FADN FALU 33 H → 14 A3
FADR FALU 01 H → 10 B2
FADN FALU 32 H → 11 A2
FADR FALU 00 H → 6 B1
FADP FALU 31 H → 5 A1
FADP FALU 30 H → 3 B0, 2 A0
S0 OE → 1, 15
F3 → 12 AE1 → BUS FP A 10 H
F2 → 9 AD1 → BUS FP A 09 H
F1 → 7 AC1 → BUS FP A 08 H
F0 → 4 AB1 → BUS FP A 07 H

FADS SEL AR FMT H
FADS BUS ← FAD L

REVISIONS		
CHK	CHANGE NO.	REV.

(FALU MUX) (SLOT 27)

TITLE	SIZE	CODE	NUMBER	REV.
FRACTION ADDER (FADT)	D	CS	M8288-0-1	*
SCALE	SHEET 17 OF 17	DIST.		

8 7 6 5 4 3 2 1

COMPONENT SIDE VIEW

digital

TITLE FPA CONTROLLER (FCT)

SIGNATURES / DATE

SIZE E | CODE N/A | NUMBER M8285-2-0 | REV

NEXT ASSY | USED ON | APPLICATION | DO NOT SCALE DRAWING

SCALE 2-1 | SHT 1 OF 1

ECO# REV. | ECO DESCRIPTION | BASE REV.

CHANGE NO REV

NOTES:

Ø-29 Ø-28 Ø-27 Ø-30 Ø-31 Ø-32 Ø-24 Ø-26 Ø-33 Ø-25 Ø-21 Ø-22 Ø-23 Ø-20 Ø-19 Ø-12 Ø 13 Ø-14 Ø-15 Ø-16 Ø-17

3-8 3-10 3-9 1-5 1-2 3-11 3-29 3-27 3-28 3-14 3-5 3-12 3-23 3-7 3-13 3-32 3-4 3-31 3-30 3-6 3-22 3-19 3-24 3-20 3-26 3-21 3-16 3-18 3-15 3-25 3-17 2-5 2-7 2-4 2-3 2-1 2-2

STAKE

C102 C101 C100 C99 C98 C97 C96

VUTSRPNMLKJHFEDCBA

F E D C B A

18785-2-0 C

5013090A M8289 LAYER 1

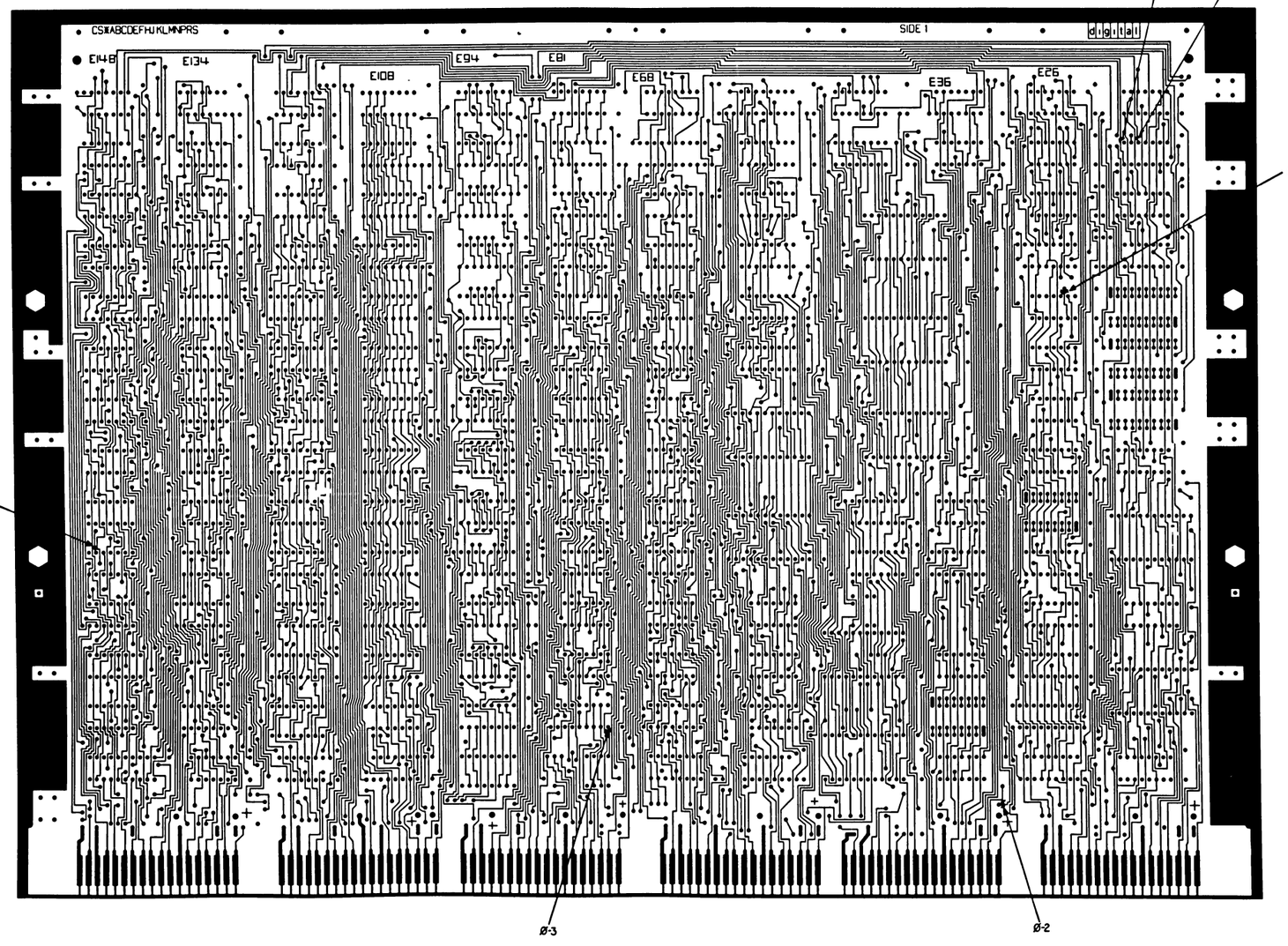

REVISIONS		
ZONE	CHANGE NO.	REV

TITLE	SIZE	CODE	NUMBER	REV.
FPA_CONTROLLER (FCT)	E	JA	M8289-Ø-Ø	C
SCALE 2-1 SHEET 2 OF 6	DWG.			

TW

5013090A M8289 LAYER 2

L2

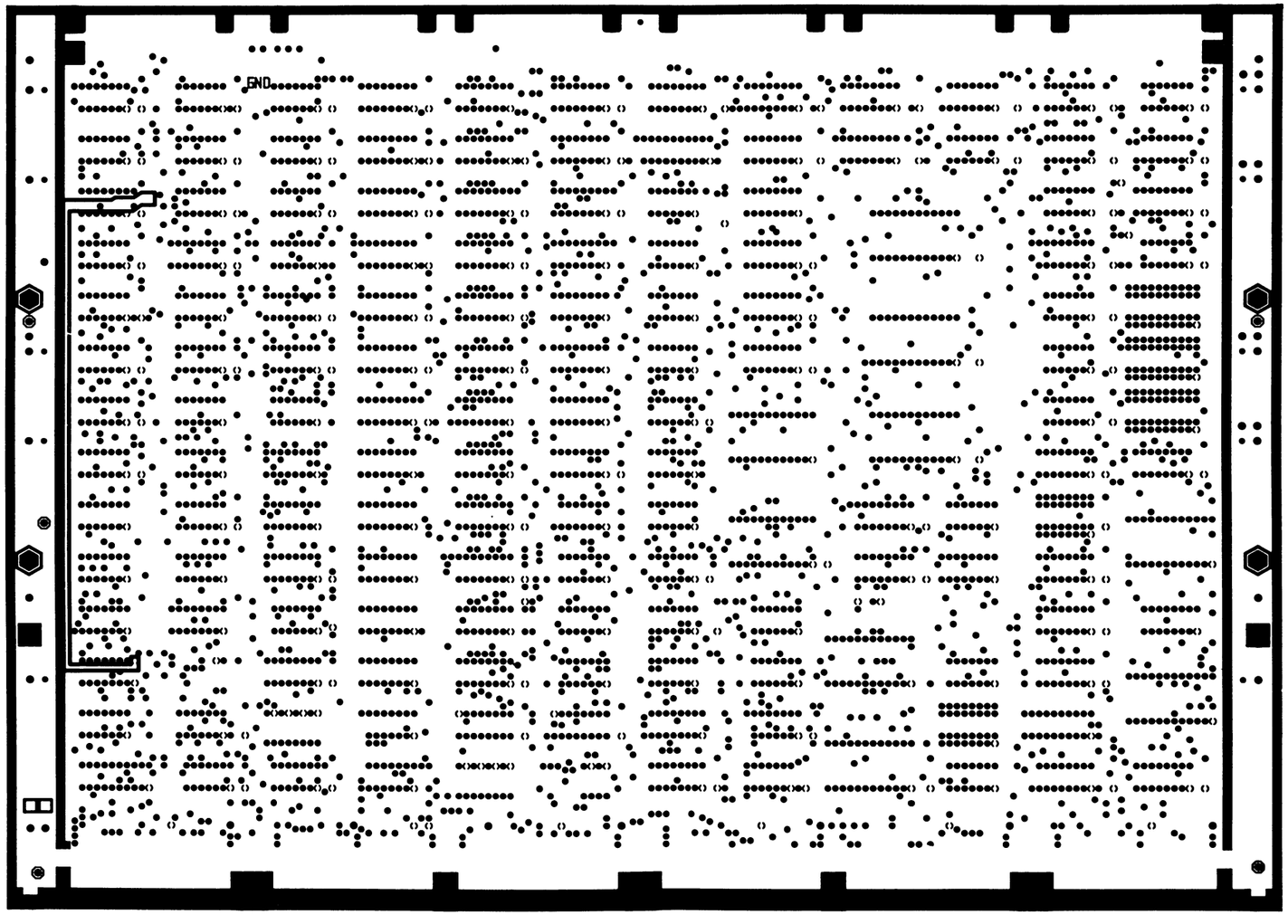

REVISIONS		
ENG	CHANGE NO.	REV

TITLE	SIZE	CODE	NUMBER	REV.
FPA CONTROLLER (FCT)	E	UA	M8289-Ø-Ø	C
SCALE 2 – 1	SHEET 3 OF 6		DWT.	

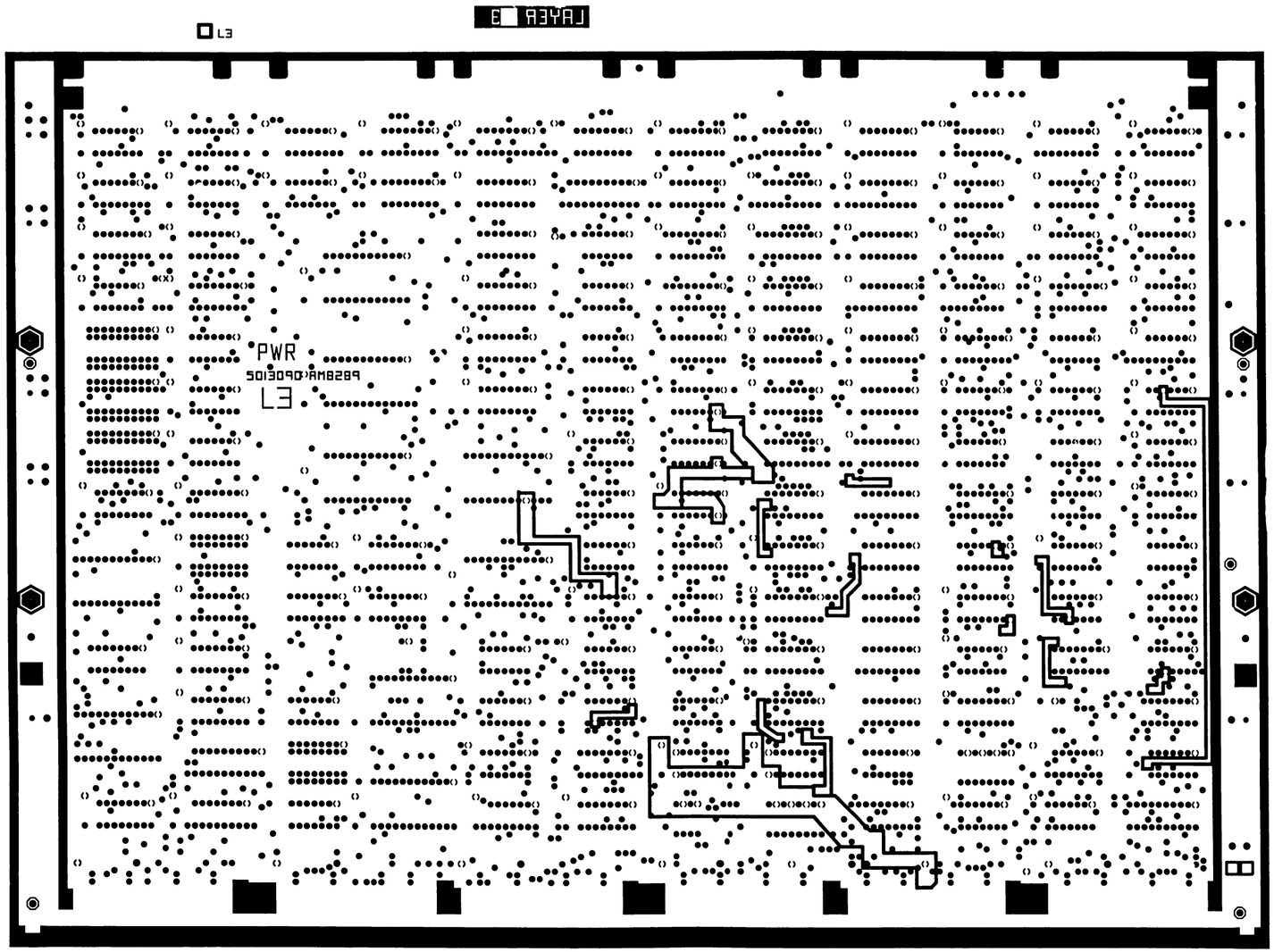

TITLE	SIZE	CODE	NUMBER	REV.
FPA CONTROLLER (FCT)	E	UA	M8289-Ø-Ø	C
SCALE 2 - 1	SHEET 4 OF 6	DIST		

REVISIONS

CHK	CHANGE NO	REV

"THIS DRAWING AND SPECIFICATIONS, ARE THE PROPERTY OF DIGITAL EQUIPMENT CORPORATION AND SHALL NOT BE REPRODUCED OR COPIED OR USED IN WHOLE OR IN PART AS THE BASIS OF MANUFACTURE OR SALE OF ITEMS WITHOUT WRITTEN PERMISSION.
COPYRIGHT © 1978, DIGITAL EQUIPMENT CORPORATION"

REVISIONS		
CHR	CHANGE NO.	REV

TITLE: F.P.A. CONTROLLER (FCT)		SIZE	CODE	*NUMBER	REV.
SCALE 2 - 1	SHEET 5 OF 6	E	UA	M8289-Ø-Ø	C
		DIST			

TW

"THIS DRAWING AND SPECIFICATIONS, HEREIN, ARE THE PROPERTY OF DIGITAL EQUIPMENT CORPORATION AND SHALL NOT BE REPRODUCED OR COPIED OR USED IN WHOLE OR IN PART AS THE BASIS FOR THE MANUFACTURE OR SALE OF ITEMS WITHOUT WRITTEN PERMISSION.
COPYRIGHT ©1977 DIGITAL EQUIPMENT CORPORATION"

M8289 (FCT)

ETCH CUTS SIDE 1
1. CUT ETCH ABOVE E22-9, 10
2. CUT ETCH JUST TO RIGHT OF PTH LOCATED JUST ABOVE POSITIVE (+) LEAD OF 8 µfd CAP C97
3. CUT ETCH BELOW E89-8
4. CUT ETCH JUST AROVE E139-13

ETCH CUTS SIDE 2
5. CUT ETCH AT E148-12
6. CUT ETCH JUST BELOW E144-2
7. CUT ETCH AT E139-11
8. CUT ETCH WHICH CONNECTS E52-12 TO E52-15
9. CUT ETCH WHICH CONNECTS E52-1 TO E52-4
10. CUT ETCH AT E51-1

COMPONENT ADDS
11. ADD 74S## (1910532) TO SPARE IC LOCA'ION E28

WIRE ADDS SIDE 1
12. ADD WIRE FROM E9-8 TO PTH LOCATED ABOVE E22-9, 10
13. ADD WIRE FROM E9-9 TO E22-5
14. ADD WIRE FROM E9-10 TO E22-4
15. ADD WIRE FROM E35-3 TO PTH BELOW E28-1
16. ADD WIRE FROM PTH BELOW E28-3 TO PTH LOCATED DIRECTLY ABOVE POSITIVE (+) LEAD OF 8 µfd CAP C97
17. ADD WIRE FROM PTH BELOW E28-2 TO PTH LOCATED DIRECTLY BELOW E37-12
18. ADD WIRE FROM PTH BELOW E28-7 TO PTH TO RIGHT OF PTH BELOW E28-7
19. ADD WIRE FROM E122-3 TO PTH LOCATED DIRECTLY BELOW E122-1, 2 AND ABOVE 8 µfd CAP C102
20. ADD WIRE FROM E139-13 TO PTH LOCATED BELOW AND TO THE LEFT OF E138-1
21. ADD WIRE FROM E128-8 TO E128-9
22. ADD WIRE FROM PTH LOCATED ABOVE E141-11, 12, TO PTH LOCATED ABOVE E140-10
23. ADD WIRE FROM E139-11 TO PTH LOCATED JUST TO RIGHT OF E144-7
24. ADD WIRE FROM E128-8 TO E119-8
25. ADD WIRE FROM E148-12 TO PTH LOCATED BETWEEN E143-14 AND E144-1
26. ADD WIRE FROM E128-10 TO E51-1
27. ADD WIRE FROM E51-1 TO E51-15
28. ADD WIRE FROM E52-1 TO E52-15
29. ADD WIRE FROM E42-15 TO E68-15
30. ADD WIRE FROM E52-4 TO E52-8
31. ADD WIRE FROM E52-15 TO E42-1
32. ADD WIRE FROM PTH LOCATED ABOVE AND TO RIGHT OF C25, TO PTH LOCATED BETWEEN C24 AND E25 WHICH IS CONNECTED TO E35-10
33. ADD WIRE FROM E9-11 TO E35-1

ECO#1
COMPONENT DELETES SIDE 1:
1-1 E98 (P/N 23G04A9-00)
1-2 E107 (P/N 23G01A9-00)
1-3 E10G (P/N 23G00A9-00)
COMFONENT ADDS SIDE 1:
1-4 E98 (P/N 2375ØA9-00)
1-5 E107 (P/N 23749A9-00)
1-6 E10G (P/N23748A9-00)

ECO # 2
COMPONENT DELETES SIDE 1:
2-1. E99 (P/N 2360 5A9-00)
2-2. E10Ø (P/N 23597A9-00)
2-3. E101 (P/N 23598A9-00)
2-4. E103 (P/N 2360 6A9-00)
COMPONENT ADDS SIDE 1:
2-5. E99 (P/N 2378ØA9-00)
2-6. E10Ø (P/N 23778A9-00)
2-7. E101 (P/N 23779A9-00)
2-8. E103 (P/N 23781A9-00)

ECO#3

ETCH CUTS SIDE 1.
3-1. CUT ETCH CONNECTED TO E11-12.
3-2. CUT ETCH TO LEFT OF E11-14.
ETCH CUTS SIDE 2.
3-3. CUT ETCH ABOVE E11-14
COMPONENT ADDS SIDE 1
3-4. ADD 74S04 (1910534) TO SPARE IC LOCATION E7
3-5. ADD 74S151 (1910956) TO SPARE IC LOCATION E8.
3-6. ADD 74S74 (1910549) TO SPARE IC LOCATION E18.
WIRE ADDS SIDE 1.
3-7. ADD WIRE FROM PTH ABOVE E7-10 TO PTH BELOW E8-7
3-8. ADD WIRE FROM E118-6 TO PTH ABOVE E7-11.
3-9. ADD WIRE FROM E120-3 TO PTH ABOVE E8-15.
3-10. ADD WIRE FROM PTH ABOVE E120-11,10 TO PTH ABOVE E8-14.
3-11. ADD WIRE FROM PTH BELOW E78-2,3 TO PTH ABOVE E8-13.
3-12. ADD WIRE FROM PTH ABOVE E8-13 TO PTH BELOW E8-2.
3-13. ADD WIRE FROM PTH BELOW E8-2 TO PTH BELOW E8-4.
3-14. ADD WIRE FROM PTH ABOVE E8-11 TO E21-4.
3-15. ADD WIRE FROM PTH ABOVE E8-10 TO PTH ABOVE E37-14,15.
3-16. ADD WIRE FROM PTH ABOVE E8-9 TO PTH ABOVE E28-11.
3-17. ADD WIRE FROM PTH ABOVE E28-13 TO PTH LOCATED RIGHT OF E77-9.
3-18. ADD WIRE FROM PTH ABOVE E28-12 TO PTH BELOW E78-6.
3-19. ADD WIRE FROM PTH BELOW E18-4 TO PTH BELOW E18-1.
3-20. ADD WIRE FROM PTH BELOW E18-3 TO PTH BELOW E39-1.
3-21. ADD WIRE FROM PTH BELOW E18-3 TO PTH ABOVE E28-8.
3-22. ADD WIRE FROM PTH BELOW E18-7 TO PTH RIGHT OF PTH BELOW E18-7.
3-23. ADD WIRE FROM PTH BELOW E8-8 TO SECOND PTH RIGHT OF PTH BELOW E8-8.
3-24. ADD WIRE FROM PTH ABOVE E28-10 TO E67-8.
3-25. ADD WIRE FROM PTH ABOVE E28-9 TO E73-10.
3-26. ADD WIRE FROM PTH BELOW E18-2 TO PTH ABOVE CONNECTOR PINS BN1 AND BM1.
3-27. ADD WIRE FROM PTH BELOW E8-6 TO PTH ABOVE E11-13.
3-28. ADD WIRE FROM PTH ABOVE E11-13 TO E11-12.
3-29. ADD WIRE FROM E11-12 TO E11-1.
3-30. ADD WIRE FROM PTH ABOVE E8-15 TO PTH ABOVE E7-13.
3-31. ADD WIRE FROM PTH BELOW E7-7 TO THIRD PTH RIGHT OF PTH BELOW E7-7.
3-32. ADD WIRE FROM PTH ABOVE E7-12 TO PTH BELOW E8-3.

REVISIONS		
CHK	CHANGE NO.	REV.

TITLE	SIZE	CODE	NUMBER	REV.
FPA CONTROLLER (FCT)	D	UA	M8289-Ø-Ø	C
SCALE 2-1	SHEET 6 OF 6	DIST.		

M8289-Ø-Ø REV. C

AUTOMATED BY PRTLST.1C(4) P A R T S L I S T SHEET A1 OF A2

LINE	ITEM	DOCUMENT NUMBER	PART NUMBER	DESCRIPTION	QTY PER VARIATION 00	REFERENCE DESIGNATOR
1	1	D-MD-501309A-0-0	5013090-00	M8289	1	
2	2		1012784-00	.047 MFD 50V -20+80 CER	91	C1,C3,C7-C73,C75-C95,C104
3	3		1012084-01	8 MFD 25V G% 30D AL EL	7	C96-C102
4	4		1301775-00	820 1/4W 5% CC	5	R1,R3,R5,R7,R9
5	5		1300295-00	330 1/4W 5% CC	5	R2,R4,R6,R8,R10
6	6		1300247-00	120 1/4W 5% CC	6	R11,R13,R15,R17,R19,R21
7	7		1300250-00	150 1/4W 5% CC	6	R12,R14,R16,R18,R20,R22
8	8		1301890-00	560 1/4W 5% CC	3	R23,R25,R28
9	9		1301972-00	270 1/4W 5% CC	3	R24,R26,R27
10	10		1300365-00	1 K 1/4W 5% CC	1	R29
11	11		1910552-00	74S194 SHIFT REG.,4BIT RIGH	19	E1,E13,E23,E10,E41,E80,E81,
					CONT	E83-E94
12	12		1910531-00	DEC 74S181 ALU-4BIT	9	E2,E4,E32,E33,E34,E37,E38,E47,
					CONT	E48
13	13		1910547-00	74S153 MUX 1 OF 4 (DUAL)	12	E3,E5,E16,E40,E42,E49,E51,E52,
					CONT	E53,E54,E68,E15
14	14		1910537-00	74S11 AND GATE-TRIPLE 3INP	3	E9,E64,E148
15	15		1910542-00	74S64 A-O-I CATE 4-2-3-2	10	E11,E12,E20,E25,E26,E27,E29,E44,
					CONT	E132,E140
16	16		1913670-00	74S373 LATCH 8BIT TRASP TR	2	E14,E135
17	17		1911641-00	SN 74S257 MUX,QUAD 2 TO 1	2	E17,E19
18	18		1910534-00	74S04 INVERTER GATE-HEX 1I	9	E21,E35,E59,E61,E72,E122,E126,
					CONT	E138,E7
19	19		1912389-00	74S08 AND GATE-QUAD 2IN,PO	5	E22,E45,E57,E139,E147
20	20		1912746-00	DEC 74S37 NAND GATE-QUAD 2IN	5	E24,E43,E58,E95,E96
21	21		1913839-00	74LS165 SHIFT REG.,8BIT	3	E30,E55,E56
22	22		1910532-00	74S00 NAND GATE-QUAD 2IN$	10	E31,E73,E111,E116,E118,E125,
					CONT	E129,E130,E141,E28
23	23		1912388-00	74S02 NOR GATE-QUAD 2IN,PO	5	E36,E46,E62,E128,E142
24	24		1910549-00	74S158 MUX 1 OF 2 (QUAD)	5	E50,E113,E114,E131,E39

REVISION HISTORY

ENG	ECO NUMBER	REV
INIT		*
WH	00001	A
P.G	00002	B
J.F	00003	C

BASIC PART NO: M8289

SECTION A OF A

SECTION.VARIATION INDEX

[A] 00

[B]

[C]

[D]

[E]

[F]

[H]

[J]

[K]

[L]

[M]

[N]

DRN: F SMART

DATE: 01-NOV-77

CHK'D: F SMART

DATE: 01-NOV-77

DES.ENG: STAN LACKEY

DATE: 02-NOV-77

RESP.ENG.: STAN LACKEY

DATE: 02-NOV-77

MFG.ENG.: MIKE TERELLA

DATE: 02-NOV-77

ASSEMBLY NUMBER: D-UA-M8289-0-0

TOP DOCUMENT NUMBER: M8289

D	I	G	I	T	A	L

TITLE PARTS LIST

FPA CONTROLLER

DOCUMENT NUMBER

SIZE	CODE	NUMBER	REV
K	PL	M8289-0-DBP	C

FILE NAME: M8289C.PLS

EDIT #: 20

"THIS DRAWING AND SPECIFICATIONS HEREIN, ARE THE PROPERTY OF DIGITAL EQUIPMENT CORPORATION AND SHALL NOT BE REPRODUCED OR COPIED OR USED IN WHOLE OR IN PART AS THE BASIS FOR THE MANUFACTURE OR SALE OF ITEMS WITHOUT WRITTEN PERMISSION.
COPYRIGHT (C) 1979, DIGITAL EQUIPMENT CORPORATION "

711

LINE	ITEM	DOCUMENT NUMBER	PART NUMBER	DESCRIPTION	QTY PER VARIATION 00	REFERENCE DESIGNATOR
25	25		1910541-00	74S40 NAND GATE-DUAL 4IN,B	6	E63,E66,E109,E123,E127,E145
26	26		23036B1-00	B1-01	1	E67
27	27		1911415-00	10125 ECL TO TTL TRNSLTR	2	E69,E82
28	28		1910544-00	74S74 FF-D DUAL,EDGE TRIGG	5	E70,E71,E115,E134,E18
29	29		1910956-00	74S151 MUX 1 OF 8	7	E74-E78,E137,E8
30	30		1912097-00	SN 74S182 LOOK AHD CARRY GEN	1	E79
31	31		1910550-00	74S174 FF-D HEX	1	E110
32	32		1911675-00	74S138 DECODER/DEMUX 3-8 LIN	2	E112,E124
33	33		1910545-00	74S112 FF-JK DUAL,EDGE TRIG	1	E117
34	34		1912096-00	DEC 74S86 XOR GATE,QUAD 2IN	2	E119,E120
35	35		1910536-00	74S10 NAND GATE-TRIPLE 3IN	4	E121,E136,E143,E144
36	36		1911712-00	74S51 AND-OR GATE-INVERT D	1	E133
37	37		1910539-00	74S20 NAND GATE-DUAL 4INPU	3	E60,E65,E146
38	38		23778A9-00	A9-01	1	E100
39	39		23779A9-00	A9-01	1	E101
40	40		23599A9-00	A9-01	1	E102
41	41		23748A9-00	A9-01	1	E106
42	42		23749A9-00	A9-01	1	E107
43	43		23602A9-00	A9-01	1	E108
44	44		23603A9-00	A9-01	1	E97
45	45		23750A9-00	A9-01	1	E98
46	46		23780A9-00	A9-01	1	E99
47	47		23781A9-00	A9-01	1	E103
48	48		23607A9-00	A9-01	1	E104
49	49		23608A9-00	A9-01	1	E105
50	50		1210711-02	HANDLE,MODULE,HEX	1	
51	51		9000024-01	EYELET, ROLLED FLANGE, .121 OD X	12	
52	52		9105740-50	WIRE(WRAP)30AWG UL1423	A/R	

0 NOTE: IC SPARE LOCATIONS ARE E6

D	I	G	I	T	A	L	TITLE	SECTION A OF A	SIZE	CODE	DOCUMENT NUMBER	REV
							FPA CONTROLLER		K	PL	M8289-0-DBP	C

"THIS DRAWING AND SPECIFICATIONS, HEREIN, ARE THE PROPERTY OF DIGITAL EQUIPMENT CORPORATION AND SHALL NOT BE REPRODUCED OR COPIED OR USED IN WHOLE OR IN PART AS THE BASIS FOR THE MANUFACTURE OR SALE OF ITEMS WITHOUT WRITTEN PERMISSION. COPYRIGHT © 1977 , DIGITAL EQUIPMENT CORPORATION"

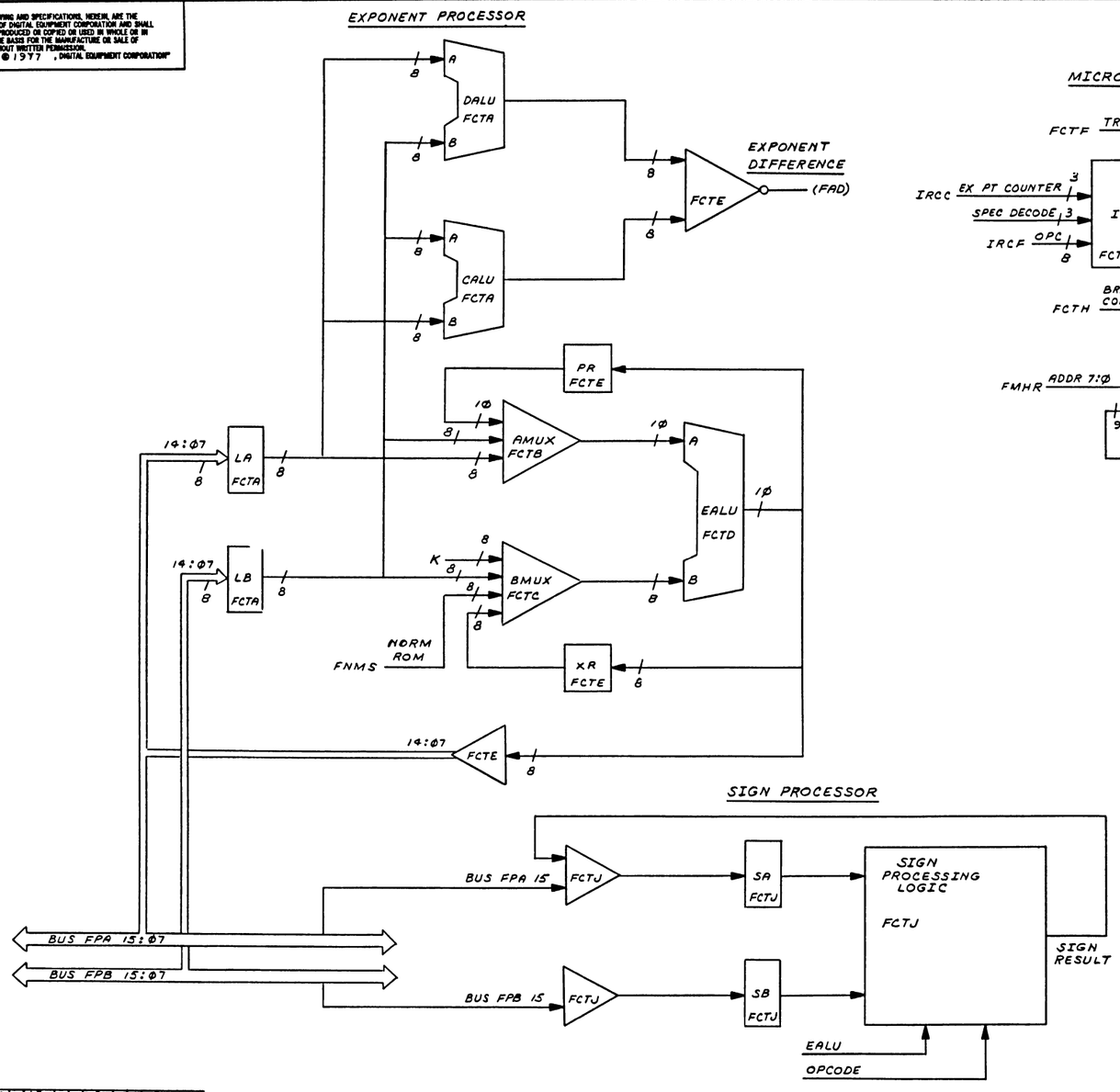

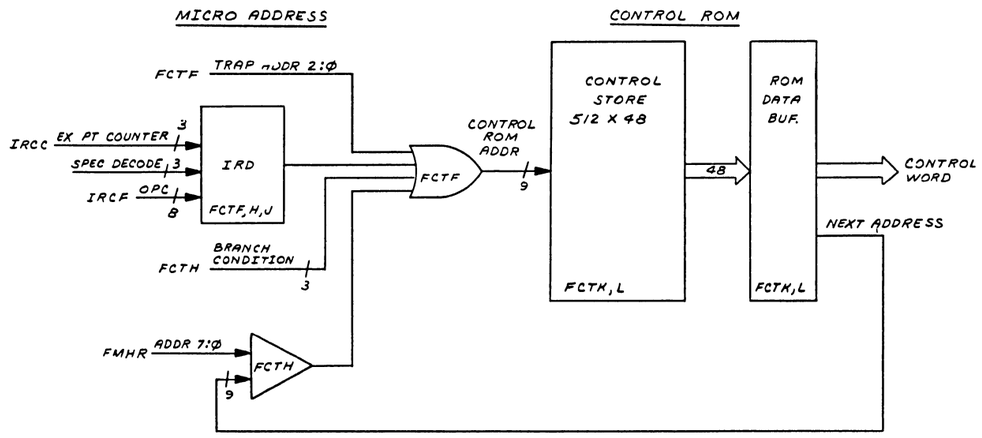

FCT-CPU SIGNAL NAME TRANSLATION TABLE			
SIGNAL NAME	C.S. PAGE USED ON	SIGNAL NAME	C.S. PAGE USED ON
CEHP PSL CMP H	FCTF	IRCD IMMED L	FCTF
DAPL ACC RA ADRS Ø H	FCTP	IRCF OPC Ø H	FCTF, J
DAPL ACC RA ADRS 1 H	FCTP	IRCF OPC 1 H	FCTF, J
DAPL ACC RA ADRS 2 H	FCTP	IRCF OPC 2 H	FCTF
DAPL ACC RA ADRS 3 H	FCTP	IRCF OPC 3 H	FCTF
DAPL ACC RA CONTEXT Ø H	FCTM,P	IRCF OPC 4 H	FCTF,J
DAPL ACC RA CONTEXT 1 H	FCTM,P	IRCF OPC 5 H	FCTF
IDPA DST R MODE H	FCTF	IRCF OPC 6 H	FCTF
IDPJ B1 VAL (Ø) H	FCTJ	IRCF OPC 7 H	FCTF
IDPJ B2 VAL (Ø) H	FCTF	IRCF R MODE L	FCTF,J
IBPM VAX SL L	FCTF	IRCJ IB CALL H	FCTF,H,P
IDPN SP1 ADR Ø L	FCTP	USCB CLR UWCRD H	FCTH
IDPN SP1 ADR 1 L	FCTP	FPA SIGNAL NAME	SIGNAL NAME USED IN CPU
IDPN SP1 ADR 2 L	FCTP	FCTC ACC C DATA H	(SLOT 28) ACC C DATA H
IDPN SP1 ADR 3 L	FCTP	FCTJ ACC N DATA H	(SLOT 28) ACC N DATA H
IDPN SP2 ADR Ø L	FCTP	FCTC ACC V DATA H	(SLOT 28) ACC V DATA H
IDPN SP2 ADR 1 L	FCTP	FCTC ACC Z DATA H	(SLOT 28) ACC Z DATA H
IDPN SP2 ADR 2 L	FCTP	FCTJ ACC OVERIDE L	(SLOT 28) ACC OVERIDE L
IDPN SP2 ADR 3 L	FCTP	FCTK FP SYNC H	(SLOT 28) ACC SYNC H
IRCC EPØ H	FCTJ	FCTM ACC ERROR H	(SLOT 28) ACC ERROR H
IRCC EP1 H	FCTJ	FCTF IR 7 L	(SLOT 28) ACC UB2 H
IRCC EP2 H	FCTJ	FCTM ACC SDMS CHNL 6 H	(SLOT 28) ACC SDMS CHNL 6 H

(BLOCK DIAGRAM) (SLOT 28)

DRN. G. Vincent	9-26-77	FIRST USED ON
CHK'D	10-28-77	digital
ENG.	10-28-77	TITLE
PROJ. ENG.	10-28-77	FPA CONTROLLER (FCT)
PROD.	10-28-77	
NEXT HIGHER ASSY.		
SCALE		SIZE D CODE CS NUMBER M8289-Ø-1 REV. C
SHEET 1 OF 16		DIST.

REVISIONS

CHK	CHANGE NO.	REV.
	M8289-00001	A
	S. LACKEY	
	M8289-00002	B
	S. LACKEY	
	M8289-TWØØ3	C
	S. LACKEY	

THIS DRAWING AND SPECIFICATIONS, HEREIN, ARE THE PROPERTY OF DIGITAL EQUIPMENT CORPORATION AND SHALL NOT BE REPRODUCED OR COPIED OR USED IN WHOLE OR IN PART AS THE BASIS FOR THE MANUFACTURE OR SALE OF ITEMS WITHOUT WRITTEN PERMISSION.
COPYRIGHT © 1977 DIGITAL EQUIPMENT CORPORATION

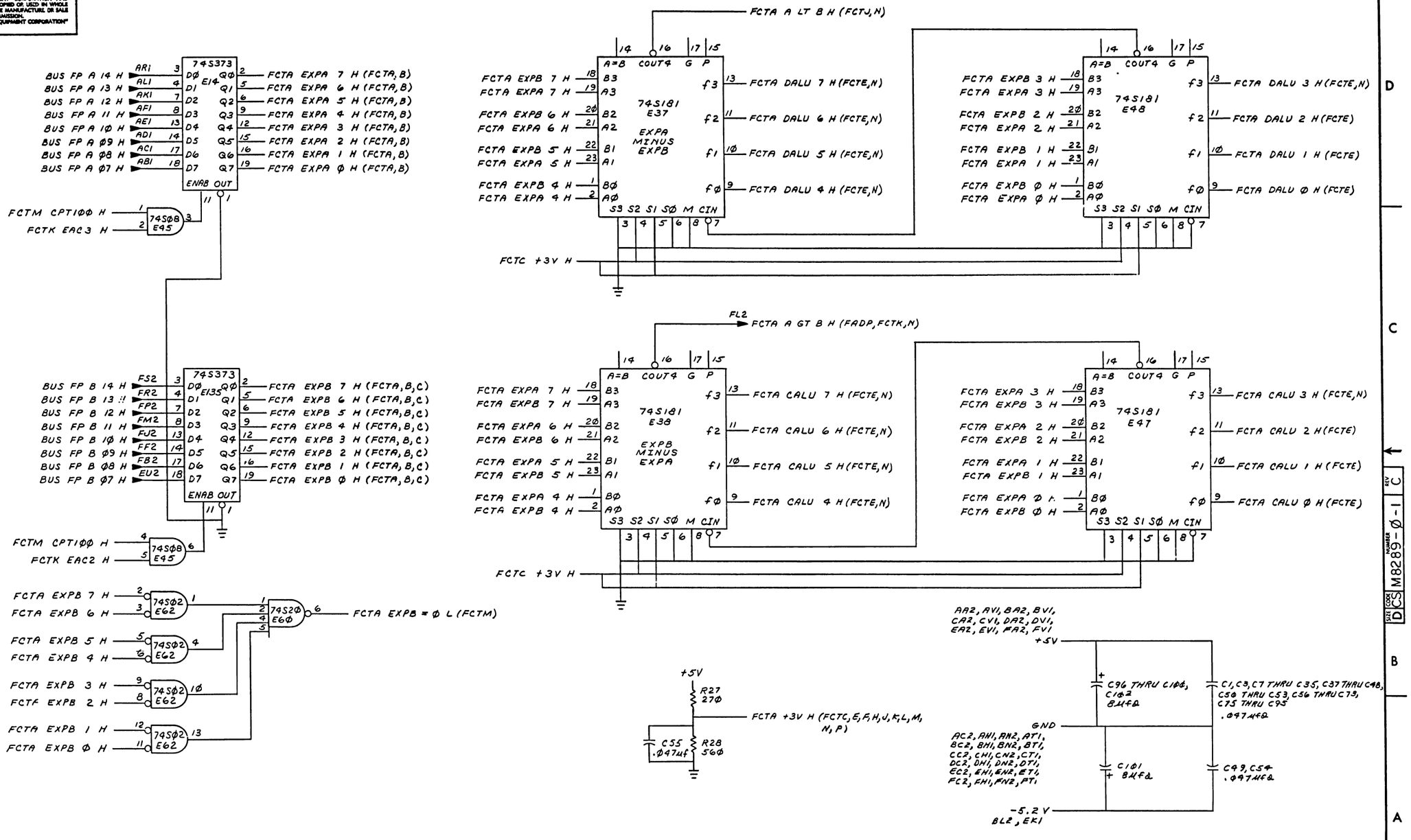

(EXPONENT PROCESSOR) (SLOT 28)

REVISIONS		
CHK	CHANGE NO.	REV.

TITLE	SIZE	CODE	NUMBER	REV.
FPA CONTROLLER (FCTA)	D	CS	M8289-0-1	C
SCALE —//	SHEET 2 OF 16		DIST.	

DEC FORM NO. DRD 130

"THIS DRAWING AND SPECIFICATIONS, HEREIN, ARE THE PROPERTY OF DIGITAL EQUIPMENT CORPORATION AND SHALL NOT BE REPRODUCED OR COPIED OR USED IN WHOLE OR IN PART AS THE BASIS FOR THE MANUFACTURE OR SALE OF ITEMS WITHOUT WRITTEN PERMISSION.
COPYRIGHT © 1977 DIGITAL EQUIPMENT CORPORATION"

FCTA EXPA 7 H
FCTA EXPA 6 H
FCTA EXPA 5 H
FCTA EXPA 4 H
FCTA EXPA 3 H
FCTA EXPA 2 H
FCTA EXPA 1 H
FCTA EXPA Ø H
74SØ2 E96
74S2Ø E6Ø
FCTB EXPA = Ø L (FCTM)

FCTA EXPA 7 H
FCTA EXPB 7 H
FCTE PR 7 H
FCTA EXPA 6 H
FCTA EXPB 6 H
FCTE PR 6 H
STB1 STBØ
DI CI BI AI DØ CØ BØ AØ
74S153 E49
f1 fØ
S1 SØ
FCTB AMX 7 H (FCTD)
FCTB AMX 6 H (FCTD)

FCTA EXPA 5 H
FCTA EXPB 5 H
FCTE PR 5 H
FCTA EXPA 4 H
FCTA EXPB 4 H
FCTE PR 4 H
74S153 E4Ø
FCTB AMX 5 H (FCTD)
FCTB AMX 4 H (FCTD)

AMX C

1	Ø	
Ø	Ø	EXPA
Ø	1	EXPB
1	Ø	PR
1	1	ADD/SUB

FCTA EXPA 3 H
FCTA EXPB 3 H
FCTE PR 3 H
FCTA EXPA 2 H
FCTA EXPB 2 H
FCTE PR 2 H
74S153 E53
FCTB AMX 3 H (FCTD)
FCTB AMX 2 H (FCTD)

FCTA EXPA 1 H
FCTA EXPB 1 H
FCTE PR 1 H
FCTA EXPA Ø H
FCTA EXPB Ø H
FCTE PR Ø H
74S153 E54
FCTB AMX 1 H (FCTD)
FCTB AMX Ø H (FCTD)

FCTD EALU 7 H
FCTK +3V H
FCTD EALU 6 H
FCTD EALU 5 H
FCTD EALU 4 H
FCTD EALU 3 H
FCTD EALU 2 H
FCTD EALU 1 H
FCTD EALU Ø H
74S64 E12
74S64 E25
FCTB EALU (7:4) = Ø H (FCTC,J)
FCTB EALU (3:Ø) = Ø H (FCTC,J)

FCTK AMX CØ H
FCTK AMX C1 H
FCTN A GT B H
74S04 E72
74S00 E73
74S08 E73
74S02 E73

74S04 E72

FCTE PR 9 H
FCTE PR 8 H
74S11 E9
FCTB AMX Ø9 H (FCTD)
FCTB AMX Ø8 H (FCTD)

(EXPONENT PROCESSOR AMUX) (SLOT 28)

REVISIONS		
CHK	CHANGE NO.	REV.

TITLE	SIZE	CODE	NUMBER	REV.
FPA CONTROLLER (FCTB)	D	CS	M8289-Ø-1	C
SCALE —H—	SHEET 3 OF 16	DIST.		

SIZE D CODE CS NUMBER M8289-Ø-1 REV. C

"THIS DRAWING AND SPECIFICATIONS, HEREIN, ARE THE PROPERTY OF DIGITAL EQUIPMENT CORPORATION AND SHALL NOT BE REPRODUCED OR COPIED OR USED IN WHOLE OR IN PART AS THE BASIS FOR THE MANUFACTURE OR SALE OF ITEMS WITHOUT WRITTEN PERMISSION.
COPYRIGHT © 1977 DIGITAL EQUIPMENT CORPORATION"

MSC DECODE
74S138 E124

FCTA +3V H
FCTL MSC 2 H
FCTL MSC 1 H
FCTL MSC Ø H
FCTC MSC = 6 H (FCTF, H)
FCTC MSC = 6 L (FCTH)
FCTC LD SIGNX L (FCTJ)
FCTC ERROR CHK L (FCTM)
FCTC SET FMØ L (FCTM)
FCTC POLY ADD L (FCTJ,M)

74S04 E61
74S04 E72
74S37 E58
FCTM CPTIØØ H
BH2
FCTC CLR RR L (FCTM, FNMH, J)

74S153 E52
FCTA EXPB 3 H
FCTE XR 3 H
FNMS NORM ROM 3 H
FCTA EXPB 2 H
FCTE XR 2 H
FNMS NORM ROM 2 H
FCTC BMX 3 H (FCTD)
FCTC BMX 2 H (FCTD)

74S153 E51
FCTA EXPB 7 H
FCTK +3V H
FCTE XR 7 H
FNMS NORM ROM 7 H
FCTA EXPB 6 H
FCTE XR 6 H
FNMS NORM ROM 6 H
FCTC BMX 7 H (FCTD)
FCTC BMX 6 H (FCTD)

74S153 E68
FCTA EXPB 1 H
FCTE XR 1 H
FNMS NORM ROM 1 H
FCTA EXPB Ø H
FCTE XR Ø H
FNMS NORM ROM Ø H
FCTD ZERO BMX H
FCTC BMX 1 H (FCTD)
FCTC BMX Ø H (FCTD)

74S02 E36
EN1
FCTC SEL NORM H (FCTD, M, FNMD)

74S153 E92
FCTA EXPB 5 H
FCTE XR 5 H
FNMS NORM ROM 5 H
FCTA EXPB 4 H
FCTE XR 4 H
FNMS NORM ROM 4 H
FCTD ZERO BMX H
FCTK BMXC1 H
FCTK BMXCØ H
FCTC BMX 5 H (FCTD)
FCTC BMX 4 H (FCTD)

BMXC

1	Ø	SELECT
Ø	Ø	NORM CONSTANT
Ø	1	XR
1	Ø	CNST 2ØØ (8)
1	1	EXPB

74S04 E35
74S10 E143
74S08 E57
74S08 E31
74S08 E57
FCTD EALU 8 H
FCTB EALU (7:4) = Ø H
FCTB EALU (3:Ø) = Ø H
FCTD EALU 9 H
FCTD EALU 8 H
FCTC EALU 8 1 (FCTJ)
BP1
FCTC FORCE ZERO L (FNML, FCTM)
FCTC EALU ZERO L (FCTE)
AF2
FCTC ACC ZDATA H (CEHC, FCTM)
AH2
FCTC ACC VDATA H (FCTM, CEHC)
CN1
FCTC ACC CDATA H (CEHC)

+5V
R26 270
C36 .047μF
R25 56Ø
FCTC +3V H (FCTA, J, N, P)

(EXPONENT PROCESSOR BMUX) (SLOT 28)

REVISIONS		
CHK	CHANGE NO.	REV.

TITLE	SIZE	CODE	NUMBER	REV.
FPA CONTROLLER (FCTC)	D	CS	M8289-Ø-1	C
SCALE —	SHEET 4 OF 16	DIST.		

"THIS DRAWING AND SPECIFICATIONS, HEREIN, ARE THE PROPERTY OF DIGITAL EQUIPMENT CORPORATION AND SHALL NOT BE REPRODUCED OR COPIED OR USED IN WHOLE OR IN PART AS THE BASIS FOR THE MANUFACTURE OR SALE OF ITEMS WITHOUT WRITTEN PERMISSION.
COPYRIGHT © 1977 DIGITAL EQUIPMENT CORPORATION"

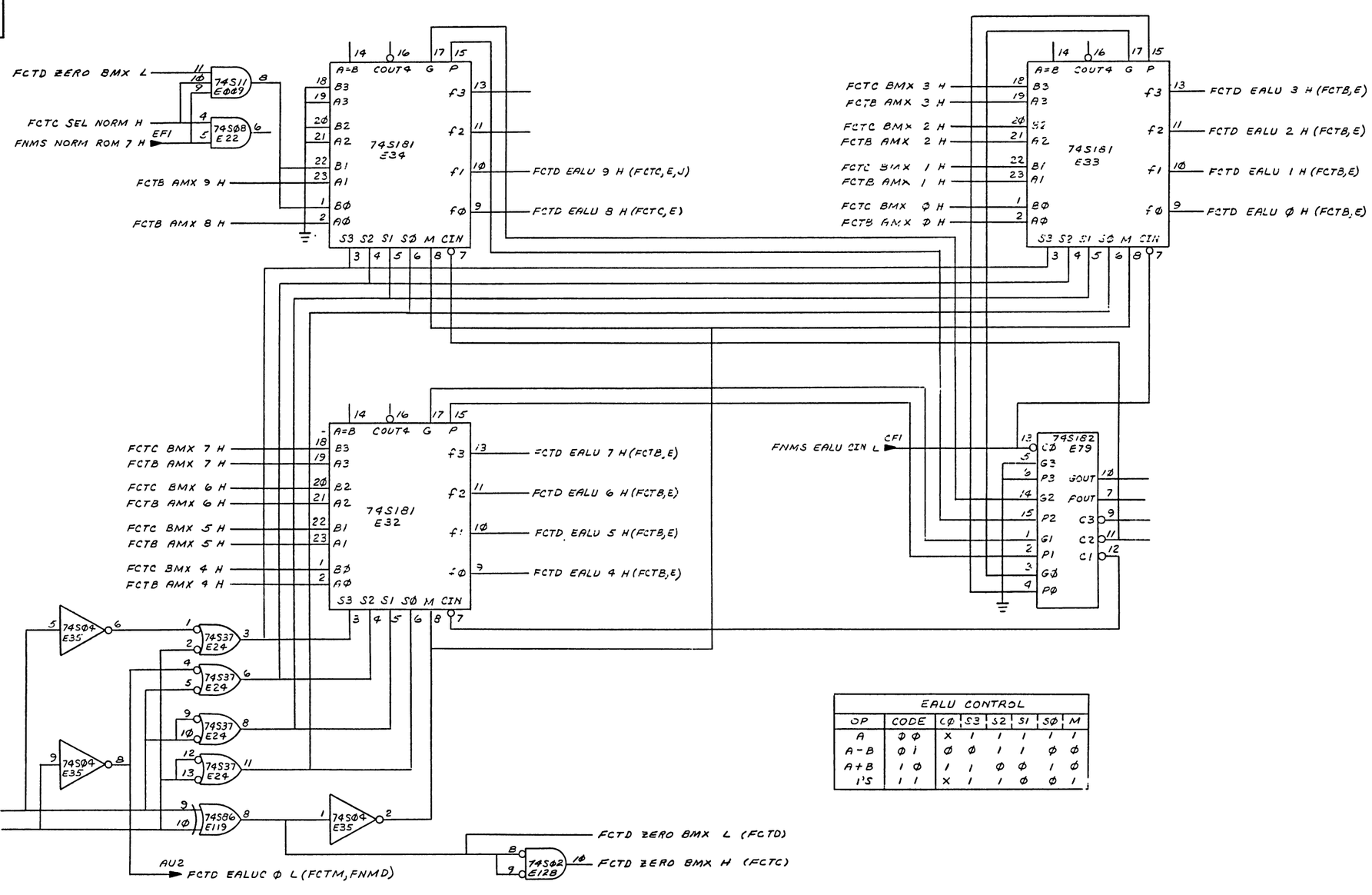

EALU CONTROL

OP	CODE	CØ	S3	S2	S1	SØ	M
A	Ø Ø	X	1	1	1	1	1
A-B	Ø 1	Ø	Ø	1	1	Ø	Ø
A+B	1 Ø	1	1	Ø	Ø	1	Ø
1'S	1 1	X	1	1	Ø	Ø	1

(EXPONENT ALU) (SLOT 28)

REVISIONS

CHK	CHANGE NO.	REV.

TITLE	SIZE	CODE	NUMBER	REV.
FPA CONTROLLER (FCTD)	D	CS	M8289-Ø-1	C
SCALE —11— SHEET 5 OF 16	DIST.			

"THIS DRAWING AND SPECIFICATIONS, HEREIN, ARE THE PROPERTY OF DIGITAL EQUIPMENT CORPORATION AND SHALL NOT BE REPRODUCED OR COPIED OR USED IN WHOLE OR IN PART AS THE BASIS FOR THE MANUFACTURE OR SALE OF ITEMS WITHOUT WRITTEN PERMISSION.
COPYRIGHT © 1977 DIGITAL EQUIPMENT CORPORATION"

FCTD EALU 9 H
FCTD EALU 8 H
FCTC EALU ZERO L
FCTA +3V H
FCTE PR 9 H (FCTB,H)
FCTE PR 8 H (FCTB,H)
FCTE EALU ZERO H (FCTH)
79504 E72
74S194 E80

FCTD EALU 7 H
FCTD EALU 6 H
FCTD EALU 5 H
FCTD EALU 4 H
FCTK +3V H
FCTE XR 7 H (FCTC)
FCTE XR 6 H (FCTC)
FCTE XR 5 H (FCTC)
FCTE XR 4 H (FCTC)
74S194 E10

FCTE PR 7 H (FCTB)
FCTE PR 6 H (FCTB)
FCTE PR 5 H (FCTB)
FCTE PR 4 H (FCTB)
74S194 E81

FCTD EALU 3 H
FCTD EALU 2 H
FCTD EALU 1 H
FCTD EALU Ø H
FCTE XR 3 H (FCTC)
FCTE XR 2 H (FCTC)
FCTE XR 1 H (FCTC)
FCTE XR Ø H (FCTC)
74S194 E23

FCTE PR 3 H (FCTB)
FCTE PR 2 H (FCTB)
FCTE PR 1 H (FCTB)
FCTE PR Ø H (FCTB)
74S194 E82

74S257 E19
BUS FP A 14 H
BUS FP A 13 H
BUS FP A 12 H
BUS FP A 11 H

74S257 E17
BUS FP A 10 H
BUS FP A Ø9 H
BUS FP A Ø8 H
BUS FP A Ø7 H

FCTA CALU 7 H
FCTA DALU 7 H
FCTA CALU 6 H
FCTA DALU 6 H
FCTA CALU 5 H
FCTA DALU 5 H
FCTA CALU 4 H
FCTA DALU 4 H
74S158 E39
FCTE EXP DIFF 7 L (FCTN)
FCTE EXP DIFF 6 L (FCTN)
FCTE EXP DIFF 5 L (FCTN)
FCTE EXP DIFF 4 L (FCTN)

FCTA CALU 3 H
FCTA DALU 3 H
FCTA CALU 2 H
FCTA DALU 2 H
FCTA CALU 1 H
FCTA DALU 1 H
FCTA CALU Ø H
FCTA DALU Ø H
74S158 E50
FCTE EXP DIFF 3 L (FCTN)
FCTE EXP DIFF 2 L (FCTN)
FCTE EXP DIFF 1 L (FCTN)
FCTE EXP DIFF Ø L
FCTN A GT B L

74S40 E63
74S40 E66
74S40 E123
FCTE SHF COUNT 5 H (FADH,J,K,L)
FCTE SHF COUNT 4 H (FADH,J,K,L)
FCTE SHF COUNT 3 H (FADH,J,K,L)
FCTE SHF COUNT 2 H (FADH,J,K,L)
FCTE SHF COUNT 1 H (FADH,J,K,L)
FCTE SHF COUNT Ø H (FADH,J,K,L)

74S08 E57
FCTN COMPL AR L
FCTN COMPL BR L
FCTN ED GTR 63 L
CRI
FCTE COMPL L (FADS,FCTN,M)
FCTA +3V H

TNML BUS ← EXP L
FCTD EALU 8 H

(SLOT 28)

REVISIONS

CHK	CHANGE NO.	REV.

TITLE	SIZE	CODE	NUMBER	REV.
FPA CONTROLLER (FCTE)	D	CS	M8289-Ø-1	C
SCALE —"	SHEET 6 OF 16	DIST.		

"THIS DRAWING AND SPECIFICATIONS, HEREIN, ARE THE PROPERTY OF DIGITAL EQUIPMENT CORPORATION AND SHALL NOT BE REPRODUCED OR COPIED OR USED IN WHOLE OR IN PART AS THE BASIS FOR THE MANUFACTURE OR SALE OF ITEMS WITHOUT WRITTEN PERMISSION.
COPYRIGHT © 1977 DIGITAL EQUIPMENT CORPORATION"

IRCF OPC 5 H
FCTA +3V H
74S37 E96 (EV2, FE2, FD2)
FCTF DOUBLE H (FCTN, FNMP, FMLD, H, FMHM, N, P, R)
FCTF FLOAT H (FCTF, H, N, FNMP)

FCTL MSC Ø H
FCTF IR4 L
FCTJ DEC ABT L
FCTF LONG L
74S51 E133

FCTL MSC 6 H
FCTF ACC INSTR H
FCTL MSC 1 H
FCTH TRAP DIS L
74S20 E196
74S04 E61
74S00 E130

FCTF IR2 H
FCTF IR7 L
74S00 E118
IRCF R MODE L
IDPM VAXSL L
74S00 E118 (EM1, FV2)
IDPA DST R MODE H
FCTF IR4 L
74S11 E198 (DV2)
IDPJ B2 VAL (Ø) H
74S04 E138 (FS1)
74S10 E194
74S20 E196
FCTF LONG L (FCTF)
FCTJ DIS DEC L (FCTJ)
FCTJ DEC ABTL

74S158 E131
A3 B3 A2 B2 A1 B1 AØ BØ
STB SØ
f3 f2 f1 fØ
FCTL MSC Ø H

FCTH TRAP AØ7 L
74S37 E95 (EF2)
FCTF CRADR Ø7 H (FCTK, L, FMLM, P)
FCTH TRAP AØ6 L
74S37 E95 (EE2)
FCTF CRADR Ø6 H (FCTK, L, FMLM, P)
FCTH TRAP AØ5 L
74S37 E95 (ED2)
FCTF CRADR Ø5 H (FCTK, L, FMLM, P)
FCTH TRAP AØ4 L
74S37 E95 (EB2)
FCTF CRADR Ø4 H (FCTK, L, FMLM, P)
FCTH TRAP AØ3 L
74S37 E96 (ES1)
FCTF CRADR Ø3 H (FCTK, L, FMLM, P)
FCTH TRAP AØ2 L
FCTH BRC 2 L
74S40 E109 (DF1)
FCTF CRADR Ø2 H (FCTK, L, FMLM, P)

IRCF OPC 1 H
74S04 E138 (ET2)
FCTF IR1 L (FCTF, J)
FCTF IR4 L (FCTF, J)
FCTF IR7 L (FCTF, USCNS)
FCTF IR BR1 L (FCTH)
IRCF OPC 4 H
74S04 E138 (ET2)
74S10 E194 (BP2)
74S00 E116
IRCF OPC 7 H
74S04 E138 (ES2)
74S11 E198
FCTF POLY L (FCTN)
FCTF 2ND R MODE H
IRCF OPC Ø H
74S00 E130 (ER2)
IRCD IMMED L
IRCF R MODE L
74S00 E130 (ER1, EM1)
IDPM VAXSL L
74S04 E130 (FV2)
FCTF R+SL H (FCTJ)
FCT= IR BRØ L (FCTH)

FCTH CPCS57 H
FCTF FLOAT H
FCTH CPCS56 H
FCTH ACC TRAP H
FCTH CPCS55 H
FCTK NEXT ADR Ø8 H
FCTH TRAP DIS L
74S00 E111
74S00 E111
74S00 E111
74S00 E111
74S00 E116
FCTH TRAP AØ1 L
FCTH BRC 1 L
74S40 E109 (DJ1)
FCTF CRADR Ø1 H (FCTK, L, FMLM, P)
FCTH TRAP AØØ L
FCTH BRC Ø L
74S40 E195 (DL1)
FCTF CRADR ØØ H (FCTK, L, FMLM, P)
74S37 E96 (EU1)
FCTF CRADR Ø8 H (FCTK, L, FMLM, P)

FCTC MSC = 6 H
FCTM CPT1ØØ H
74S00 E73 (AT2)
FCTF INIT L (FMMR)
FCTJ EPI L
IRCJ IB CALL H
74S11 E198 (CM1)
FCTF LD LR H (FMHS, FMLN)
FCTM CPT15Ø H
74S08 E147
FCTA +3V H
74S08 E197
FCTF 2ND R MODE H (FCTF)
FCTF IR4 L
74S74 E139 (D 1, C Ø)
IRCF OPC 4 H
74S04 E129 (ET2, EE1)
FCTJ IRØ L
FCTF IR2 L
FCTF IRI L
74S02 E128 (DU2)
FCTF EMOD L (FMLD)
FCTF DIVIDE H (FMHM, FMLL)

FCTF IRI L
FCTF IR2 H
FCTF IR7 L
FCTF IR4 L
74S64 E132
74S02 E36
FCTF ACC INSTR H (FCTF, H, J)
FCTF FLOAT H
CEHP PSL CMP H
IRCF OPC 3 H
FMLP ACC ENAB (I) H
IRCF OPC 6 H
74S02 E36 (CK2, FH2, EH2, EJ2)
74S10 E144
IRCF OPC 2 H
74S04 E138 (FK2)
FCTF IR2 H (FCTF, J)
FCTF IR2 L (FCTF, J)

(SLOT 28)

REVISIONS		
CHK	CHANGE NO.	REV.

TITLE	SIZE	CODE	NUMBER	REV.
FPA CONTROLLER (FCTF)	D	CS	M8289-Ø-1	C
SCALE —	SHEET 7 OF 10	DIST.	TW	

"THIS DRAWING AND SPECIFICATIONS, HEREIN, ARE THE PROPERTY OF DIGITAL EQUIPMENT CORPORATION AND SHALL NOT BE REPRODUCED OR COPIED OR USED IN WHOLE OR IN PART AS THE BASIS FOR THE MANUFACTURE OR SALE OF ITEMS WITHOUT WRITTEN PERMISSION.
COPYRIGHT ©1977 DIGITAL EQUIPMENT CORPORATION"

FCTH MAINT TRAP L
FCTH ACC TRAP H
74S04 E61
74S08 E139
74S04 E126
FCTH TRAP DIS L (FCTF,H)

74S158 E113
FMHR TRAP A7 H (FF1)
FCTK NEXT ADR Ø7 H
FMHR TRAP A6 H (FJ1)
FCTK NEXT ADR Ø6 H
FMHR TRAP A5 H (FK1)
FCTK NEXT ADR Ø5 H
FMHR TRAP A4 H (FL1)
FCTK NEXT ADR Ø4 H
STB SØ
FCTH TRAP AØ7 L (FCTF)
FCTH TRAP AØ6 L (FCTF)
FCTH TRAP AØ5 L (FCTF)
FCTH TRAP AØ4 L (FCTF)

74S158 E119
FMHR TRAP A3 H (FM1)
FCTK NEXT ADR Ø3 H
FMHR TRAP A2 H (FN1)
FCTK NEXT ADR Ø2 H
FMHR TRAP A1 H (FP1)
FCTK NEXT ADR Ø1 H
FMHR TRAP AØ H (FR1)
FCTK NEXT ADR ØØ H
STB SØ
FCTH TRAP AØ3 L (FCTF)
FCTH TRAP AØ2 L (FCTF)
FCTH TRAP AØ1 L (FCTF)
FCTH TRAP AØØ L (FCTF)

FCTH ACC TRAP H

74S151 E74
FCTM (A OR B) = Ø H
FCTH POLY DONE L
FCTM RSV OPR H
FNMP SWR H (EC1)
FCTF FLOAT H
FCTH BRC 2 L (FCTF)

74S151 E75
FCTH UFLOW L
FCTN SUB * EXPD (Ø+1) H
FCTH CPSYNC H
FCTM EXPB = Ø H
FNMP SWR H (EC1)
FCTF IR BR1 L
FCTH BRC 1 L (FCTF)

74S151 E76
FCTE PR 8 H
FMHP MUL/DIV DONE H (ED1)
FCTN ED GT 8 (1) H
FCTF FLOAT H
FCTM EXPA = Ø H
FNMP SWR H (EC1)
FCTF IR BRØ L
FCTH BRC Ø L (FCTH)

STB
S2 S1 SØ
FCTK BEN 2 H
FCTK BEN 1 H
FCTK BEN Ø H

FCTL WAIT H
74S04 E126
FCTC MSC = 6 L
74S00 E141
FCTH CPSYNC H
74S00 E141
FCTJ IRD ENABLE H
FCTC MSC = 6 H
FCTF ACC INSTR H
IRCJ IB CALL H (DU2)
74S20 E65
FCTH TRAP DIS L
74S40 E127
FCTH STALL A L (FCTK)
74S40 E127
FCTH STALL B L (FCTL)
FCTH IRD STALL L (FCTM)

+5V
R4 33Ø, R2 33Ø, R10Ø 33Ø, R6 33Ø, R8 33Ø
R3 82Ø, R1 82Ø, R9 82Ø, R5 82Ø, R7 82Ø
74S174 E110
BUS CS 57 H (DH2)
BUS CS 56 H (DF2)
BUS CS 55 H (DD2)
BUS CS 71 H (DD1)
BUS CS 70 H (DC1)
CLR CLK
FCTH CPCS 57 H (FCTF)
FCTH CPCS 56 H (FCTF)
FCTH CPCS 55 H (FCTF)

FCTA +3V H
FCTH DEC USI L
74S138 E112
FCTH MAINT TRAP L (FCTH)
FCTH POLY DONE L (FCTH)

74S08 E139
FCTH CPSYNC H (FCTH,M)
74S00 E141
FCTH DEC USI L (FCTH)
74S08 E139
FCTH ACC TRAP H (FCTF,H)
74S04 E61

FCTA +3V H
USCB CLR UWORD H (CJ2)
FCTM CPTØ A H
FCTM CPT100 L
7474 E70

FCTE EALU ZERO H
FCTE PR 9 H
74S02 E36
FCTH UFLOW L (FCTH)

ACC 1	Ø
Ø	Ø - NOP
1	Ø - ACC TRAP
Ø	1 - CPSYNC
1	1 - REDEFINE µSI

µSI 2	1	Ø
Ø	Ø	Ø
Ø	Ø	1 -
Ø	1	Ø -
Ø	1	1 -
1	Ø	Ø -
1	Ø	1 -
1	1	Ø - POLY END
1	1	1 - ACC TRAP

(SLOT 28)

REVISIONS		
CHK	CHANGE NO.	REV.

TITLE	SIZE	CODE	NUMBER	REV.
FPA CONTROLLER (FCTH)	D	CS	M8289-Ø-1	C
SCALE —H— SHEET 8 OF 16 DIST.				

"THIS DRAWING AND SPECIFICATIONS, HEREIN, ARE THE PROPERTY OF DIGITAL EQUIPMENT CORPORATION AND SHALL NOT BE REPRODUCED OR COPIED OR USED IN WHOLE OR IN PART AS THE BASIS FOR THE MANUFACTURE OR SALE OF ITEMS WITHOUT WRITTEN PERMISSION.
COPYRIGHT © 1977 DIGITAL EQUIPMENT CORPORATION"

FCTF DIS DEC L
IRCF OPC Ø H
FCTF DIS DEC L
IRCF OPC 4 H
IDPJ BI VAL (Ø) H
IRCF R MODE L
FCTF R + SL H
FCTJ DEC ABT L (FCTF)
FCTJ IR Ø L (FCTF,J)
FCTA A LT B H
FCTN A GT B H
FCTJ A EQ B H (FCTJ)
IRCC EPØ H
IRCC EP1 H
IRCF OPC 1 H
FCTF IR 2 L
FCTJ IRD ENABLE H (FCTH)
FCTJ EP1 L (FCTF)
FCTJ SUB H (FCTN)
FCTJ ADD H (FCTN)
FCTJ ALU ADD H (FCTJ,N)
FCTJ SA XOR SB H (FCTN)
FCTC EALU 8 L
FCTJ MUL/DIV H
FCTC POLY ADD L
FCTF IR 1 L
FNMS RES NEG H
FCTJ SB (1) H
FCTJ COM H (FCTJ)
IRCC EP2 H
IRCC EP1 H
IRCC EPØ H
FCTF ACC INSTR H
ACC OVERIDE L (USCL,S)
FCTJ SB MUX H
FCTJ COM H
FCTJ SB (1) H
FCTJ SB (Ø) H (FCTJ,M)
BUS FP B 15 H
FCTL SGNC 2 H
FCTL SGNC 1 H
FCTL SGNC Ø H
FCTJ SGN RESULT H (FCTJ)
TD EALU 9 H
FCTB EALU (3:Ø)=Ø H
FCTB EALU (7:4)=Ø H
FCTC EALU 8 L
FCTN AR NOT NORM L
FCTA A LT B H
FCTN A GT B H
FCTJ SA (1) H
FCTJ SX (1) H
FCTJ SGN RESULT H
FCTJ COM H
BUS FP A 15 H
FCTJ ACC NDATA H (CEHC,FCTM,FNMN)
FCTJ SA (1) H (FCTJ)
FCTJ SA (Ø) H (FCTM)
FCTC +3V H
FCTA +3V H
FCTM CPTØ C H
FCTJ SA=SB H (FCTN)
FCTC POLY ADD L
FCTF IR 2 H
FCTJ ALU ADD H
FCTJ ALU SUB H (FCTN,FNMS)
FCTF IR 2 L
FCTF IR 4 L
FCTJ MUL/DIV H (FCTJ)
FCTK +3V H
FCTJ SA (1) H
FCTC LD SIGN X L
FCTM CPT15Ø L
FCTA +3V H
FCTJ SX (1) H (FCTJ)

SIGNC				
2	1	Ø	SA	SB
Ø	Ø	Ø	SA	SB
Ø	Ø	1	AB	SB
Ø	1	Ø	SA	SB
Ø	1	1	RES	SB
1	Ø	Ø	SA	BB
1	Ø	1	AB	BB
1	1	Ø	SB	SB
1	1	1	SA⊕SX	SB

(SLOT 28)

REVISIONS		
CHK	CHANGE NO.	REV.

TITLE	SIZE	CODE	NUMBER	REV.
FPA CONTROLLER (FCTJ)	D	CS	M8289-Ø-1	C
SCALE —	SHEET 9 OF 16		DIST.	

SIZE CODE DCS M8289-Ø-1 REV. C

"THIS DRAWING AND SPECIFICATIONS, HEREIN, ARE THE PROPERTY OF DIGITAL EQUIPMENT CORPORATION AND SHALL NOT BE REPRODUCED OR COPIED OR USED IN WHOLE OR IN PART AS THE BASIS FOR THE MANUFACTURE OR SALE OF ITEMS WITHOUT WRITTEN PERMISSION.
COPYRIGHT © 1977 DIGITAL EQUIPMENT CORPORATION"

CTL 47:44 — 23778A9-00 E100

FCTF CRADR Ø8 H
FCTF CRADR Ø7 H
FCTF CRADR Ø6 H
FCTF CRADR Ø5 H
FCTF CRADR Ø4 H
FCTF CRADR Ø3 H
FCTF CRADR Ø2 H
FCTF CRADR Ø1 H
FCTF CRADR ØØ H

A8 A7 A6 A5 A4 A3 A2 A1 AØ → D3 D2 D1 DØ; CE ← 13

74S194 E86 — DØ DI D2 D3 → RØ(1) R1(1) R2(1) R3(1); CLR DSR DSL SØ SI CLK

FCTK NEXT ADR Ø8 H (FCTF)
FCTK NEXT ADR Ø7 H (FCTH)
FCTK NEXT ADR Ø6 H (FCTH)
FCTK NEXT ADR Ø5 H (FCTH)

CTL 43:40 — 23779A9-00 E101

FCTF CRADR Ø8 H … FCTF CRADR Ø1 H

A8 A7 A6 A5 A4 A3 A2 A1 AØ → D3 D2 D1 DØ; CE ← 13

74S194 E87 — DØ DI D2 D3 → RØ(1) R1(1) R2(1) R3(1); CLR DSR DSL SØ SI CLK

FCTK NEXT ADR Ø4 H (FCTH)
FCTK NEXT ADR Ø3 H (FCTH)
FCTK NEXT ADR Ø2 H (FCTH)
FCTK NEXT ADR Ø1 H (FCTH)

CTL 39:36 — 23599A9-00 E102

FCTF CRADR Ø8 H … FCTF CRADR ØØ H

A8 A7 A6 A5 A4 A3 A2 A1 AØ → D3 D2 D1 DØ; CE ← 13

74S194 E88 — DØ DI D2 D3 → RØ(1) R1(1) R2(1) R3(1); CLR DSR DSL SØ SI CLK

FCTK NEXT ADR ØØ H (FCTH)
FCTK BEN 2 H (FCTH)
FCTK BEN 1 H (FCTH)
FCTK BEN Ø H (FCTH)

FCTK EN CSA L

FCTA +3V H
FCTH STALL A L
FCTM CPTØ A H

+5V — R29 1K

74S04 E122 (13 → 12) → FCTK EN CSA L (FCTK)

74S04 E122 (3 → 4) → FCTK EN CSB L (FCTL)

+5V — R24 27Ø — FCTK +3. (FC ,E,J,M,N,P)

C1Ø4 .Ø47uf — R23 56Ø

CTL 35:32 — 23748A9-00 E106

FCTF CRADR Ø8 H … FCTF CRADR ØØ H

A8 A7 A6 A5 A4 A3 A2 A1 AØ → D3 D2 D1 DØ; CE ← 13

74S194 E92 — DØ DI D2 D3 → RØ(1) R1(1) R2(1) R3(1); CLR DSR DSL SØ SI CLK

FCTK AMX C1 H (FCTB)
FCTK AMX CØ H (FCTB)
FCTK BMX C1 H (FCTC)
FCTK BMX CØ H (FCTC)

CTL 31:28 — 23749A9-00 E107

A8 A7 A6 A5 A4 A3 A2 A1 AØ → D3 D2 D1 DØ; CE ← 13

74S194 E93 — DØ DI D2 D3 → RØ(1) R1(1) R2(1) R3(1); CLR DSR DSL SØ SI CLK

FCTK EALU C1 H (FCTD)
FCTK EALU CØ H (FCTD)
FCTK FPSYNC H (USCN,S) (8L1)
FCTK A GT B DEL H (FCTN)

(FPSYNC = ACC Ø)

FCTA A GT B H

CTL 27:24 — 23602A9-00 E108

A8 A7 A6 A5 A4 A3 A2 A1 AØ → D3 D2 D1 DØ; CE ← 13

74S194 E94 — DØ DI D2 D3 → RØ(1) R1(1) R2(1) R3(1); CLR DSR DSL SØ SI CLK

FCTK EAC 3 H (FCTA)
FCTK EAC 2 H (FCTA)
FCTK EAC 1 H (FCTE)
FCTK EACØ H (FCTE)

FCTM CPTØ B H

74SØØ E31 — BM1 → FCTK MCOUNT L (FMHM,..)

(CONTROL STORE AND DATA LATCHES) (SLOT 28)

REVISIONS		
CHK	CHANGE NO.	REV.

TITLE	SIZE	CODE	NUMBER	REV.
FPA CONTROLLER (FCTK)	D	CS	M8289-Ø-1	C
SCALE —11	SHEET 10 OF 16	DIST.		

TW

"THIS DRAWING AND SPECIFICATIONS, HEREIN, ARE THE PROPERTY OF DIGITAL EQUIPMENT CORPORATION AND SHALL NOT BE REPRODUCED OR COPIED OR USED IN WHOLE OR IN PART AS THE BASIS FOR THE MANUFACTURE OR SALE OF ITEMS WITHOUT WRITTEN PERMISSION.
COPYRIGHT ©1977 DIGITAL EQUIPMENT CORPORATION"

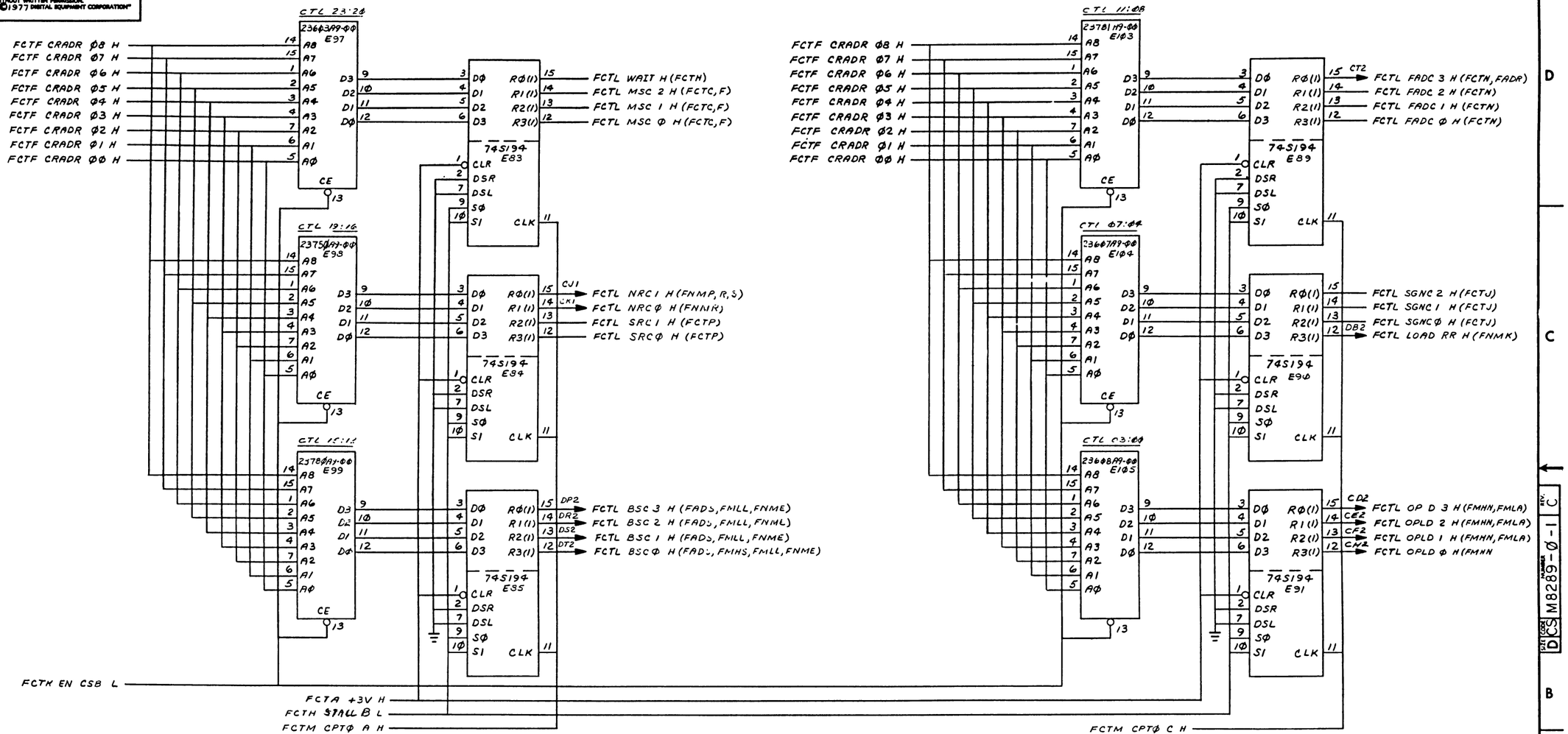

(CONTROL STORE AND DATA LATCHES) (SLOT 28)

REVISIONS		
CHK	CHANGE NO.	REV.

TITLE	SIZE	CODE	NUMBER	REV.
FPA CONTROLLER (FCTL)	D	CS	M8289-Ø-1	C
SCALE —//	SHEET 11 OF 16	DIST.		

"THIS DRAWING AND SPECIFICATIONS, HEREIN, ARE THE PROPERTY OF DIGITAL EQUIPMENT CORPORATION AND SHALL NOT BE REPRODUCED OR COPIED OR USED IN WHOLE OR IN PART AS THE BASIS FOR THE MANUFACTURE OR SALE OF ITEMS WITHOUT WRITTEN PERMISSION.
COPYRIGHT © 1977 DIGITAL EQUIPMENT CORPORATION"

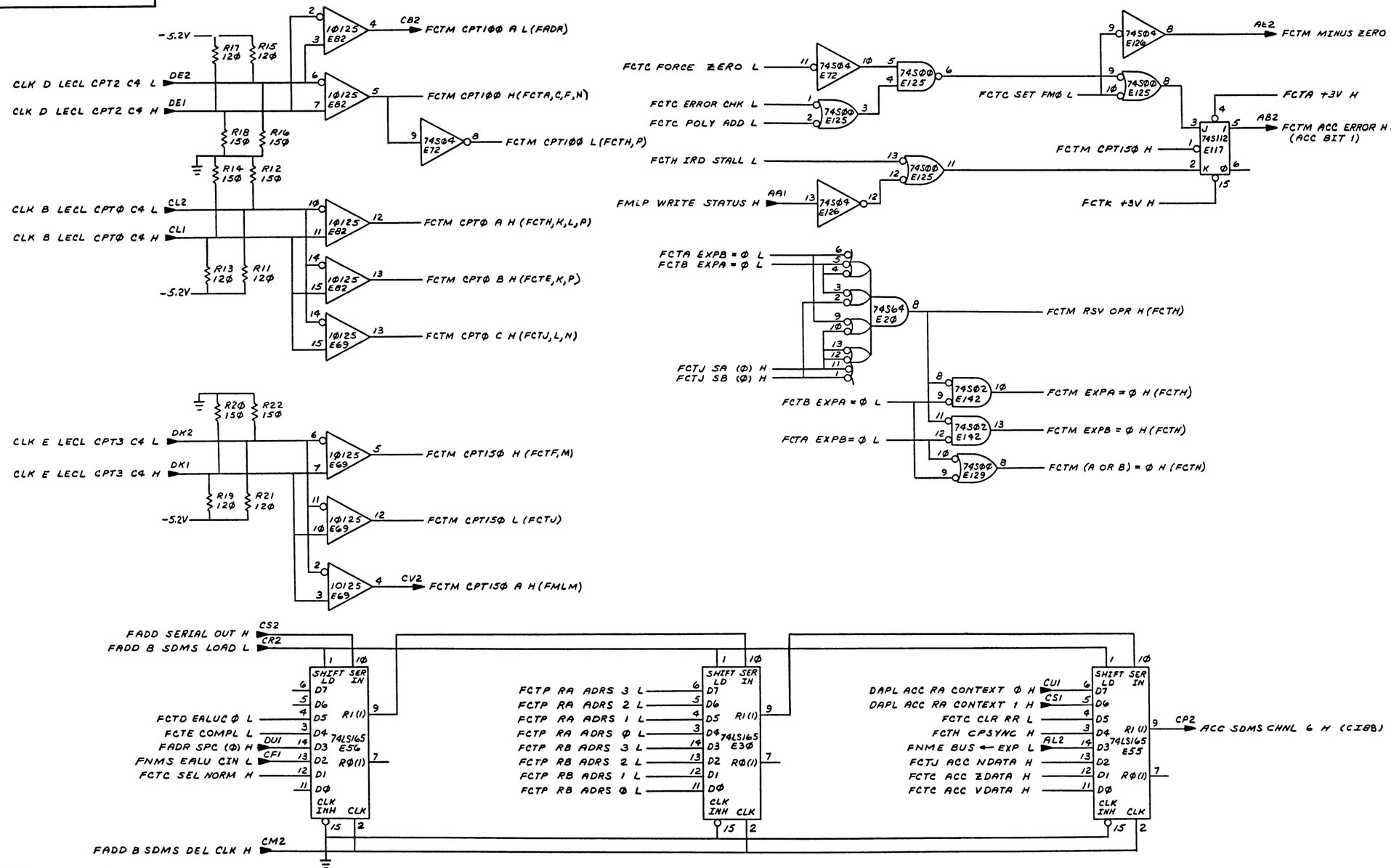

(SLOT 28)

REVISIONS		
CHK	CHANGE NO.	REV.

TITLE	SIZE	CODE	NUMBER	REV.
FPA CONTROLLER (FCTM)	D	CS	M8289-Ø-1	C
SCALE —	SHEET 12 OF 16	DIST.		

"THIS DRAWING AND SPECIFICATIONS, HEREIN, ARE THE PROPERTY OF DIGITAL EQUIPMENT CORPORATION AND SHALL NOT BE REPRODUCED OR COPIED OR USED IN WHOLE OR IN PART AS THE BASIS FOR THE MANUFACTURE OR SALE OF ITEMS WITHOUT WRITTEN PERMISSION.
COPYRIGHT ©, 1977 DIGITAL EQUIPMENT CORPORATION"

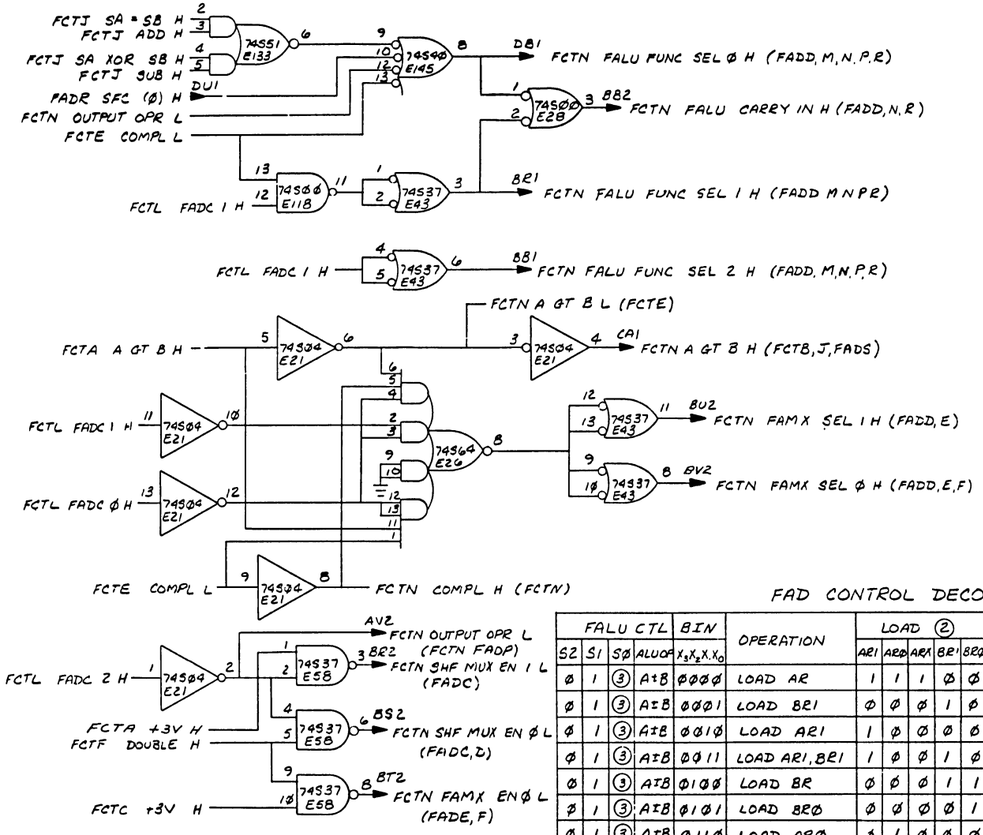

FAD CONTROL DECODE

FALU CTL S2	S1	SØ	ALUOP	BIN $X_3X_2X_1X_0$	OPERATION	LOAD ② ARI	ARØ	ARX	BRI	BRØ	ADDER MUX SEL ②	SHF MUX SEL	SHF MUX EN
Ø	1	③	A+B	ØØØØ	LOAD AR	1	1	1	Ø	Ø	①	①	①
Ø	1	③	A+B	ØØØ1	LOAD BRI	Ø	Ø	Ø	1	Ø	①	①	①
Ø	1	③	A+B	ØØ1Ø	LOAD ARI	1	Ø	Ø	Ø	Ø	①	①	①
Ø	1	③	A+B	ØØ11	LOAD ARI, BRI	1	Ø	Ø	1	Ø	①	①	①
Ø	1	③	A+B	Ø1ØØ	LOAD BR	Ø	Ø	Ø	1	1	①	①	①
Ø	1	③	A+B	Ø1Ø1	LOAD BRØ	Ø	Ø	Ø	Ø	1	①	①	①
Ø	1	③	A+B	Ø11Ø	LOAD ARØ	Ø	1	Ø	Ø	Ø	①	①	①
Ø	1	③	A+B	Ø111	LOAD ARØ, BRØ	Ø	1	Ø	Ø	1	①	①	①
—	—	—	—	1ØØØ	LOAD ALL	1	1	1	1	1	—	—	—
—	—	—	—	1ØØ1	NOT USED	Ø	Ø	Ø	Ø	Ø	—	—	—
Ø	1	③	A+B	1Ø1Ø	A+B	Ø	Ø	Ø	Ø	Ø	①	①	①
—	—	—	—	1Ø11	NOT USED	Ø	Ø	Ø	Ø	Ø	—	①	—
1	Ø	1	AORB	11ØØ	OUTPUT A	Ø	Ø	Ø	Ø	Ø	1	—	—
1	Ø	1	AORB	11Ø1	OUTPUT B	Ø	Ø	Ø	Ø	Ø	Ø	—	—
—	—	—	—	111Ø	NOT USED	Ø	Ø	Ø	Ø	Ø	—	—	—
—	—	—	—	1111	NOT USED	Ø	Ø	Ø	Ø	Ø	—	—	—

①- MUX SELECTS DETERMINED BY EXPONENT PROCESSOR.
②- IN CASE OF DP SUB AND (EXP DIFF GTR THAN 7 OR POLY), HARDWARE FORCES AN ALTERNATE FUNCTION
③- ADD/SUB DETERMINED BY OPCODE AND SIGNS.

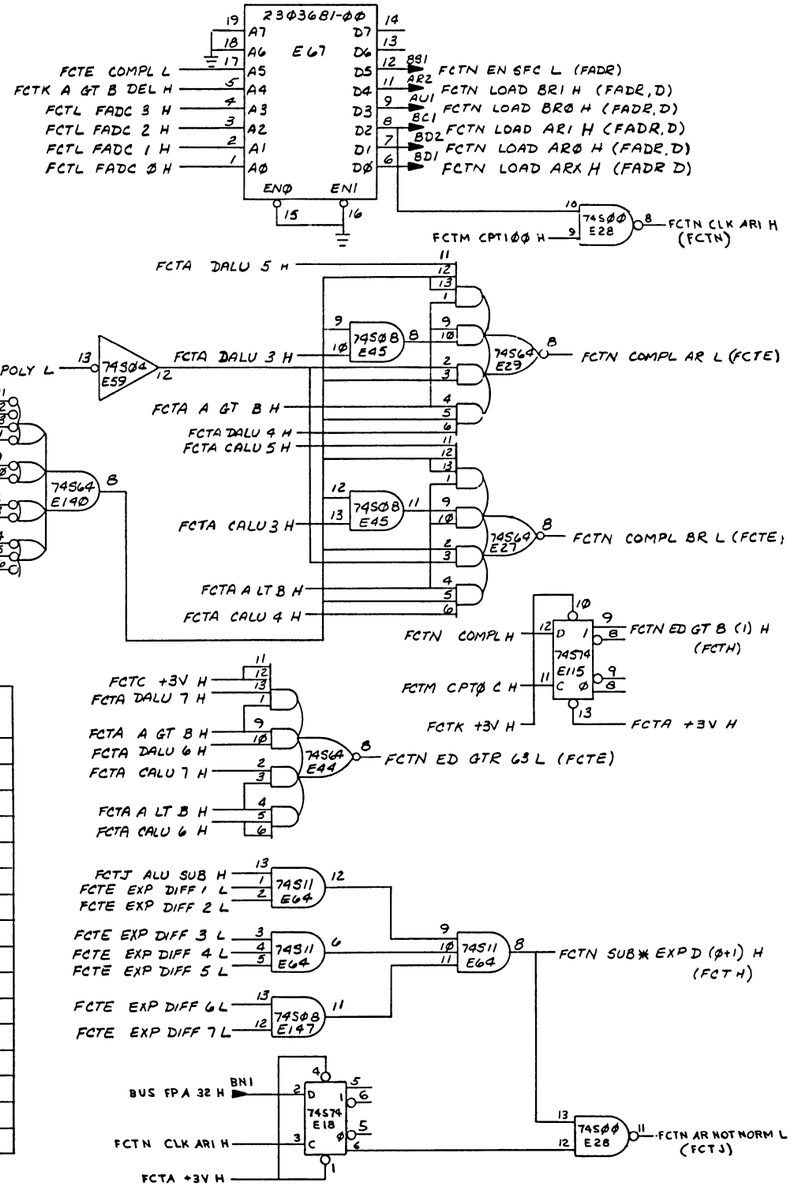

(FALU CTL + EXP PROC CTL) (SLOT 28)

REVISIONS		
CHK	CHANGE NO.	REV.

TITLE	SIZE	CODE	NUMBER	REV.
FPA CONTROLLER (FCTN)	D	CS	M8289-Ø-1	C
SCALE —	SHEET 13 OF 16	DIST.		

TW

"THIS DRAWING AND SPECIFICATIONS, HEREIN, ARE THE PROPERTY OF DIGITAL EQUIPMENT CORPORATION AND SHALL NOT BE REPRODUCED OR COPIED OR USED IN WHOLE OR IN PART AS THE BASIS FOR THE MANUFACTURE OR SALE OF ITEMS WITHOUT WRITTEN PERMISSION.
COPYRIGHT © 1977 DIGITAL EQUIPMENT CORPORATION"

IDPN SP2 ADR 3 L
IDPN SP2 ADR 2 L
IDPN SP2 ADR 1 L
IDPN SP2 ADR Ø L
AM1
AP1
AS1
AJ1
74S194 E1
FCTC +3V H
IRCJ IB CALL H
DJ2
FCTM CPTØ B H
74S181 E2 SP2+1
FCTP SP2 INC 1 L (FCTP)
FCTP SP2 INC Ø L (FCTP)
74S181 E4 PRN+1
FCTP PRN INC 1 L (FCTP)
FCTP PRN INC Ø L (FCTP)
FCTK +3V H
IDPN SPI ADR 3 L
IDPN SPI ADR 2 L
IDPN SPI ADR 1 L
IDPN SPI ADR Ø L
AM2
AP2
AS2
AJ2
74S194 E13
FCTC +3V H
IRCJ IB CALL H
DJ2
FCTM CPTØ B H
FCTP PRN 1 L (FCTP)
FCTP PRN Ø L (FCTP)
IDPN SPI ADR 3 L
IDPN SPI ADR 2 L
AM2
AP2
74S153 E16
FCTP ADRS SI H
FCTP ADRS SØ H
BE1
BF1
FCTP RA ADRS 3 L (FCTM, FNMT, U)
FCTP RA ADRS 2 L (FCTM, FNMT, U)
FCTP SP2 INC 1 L
IDPN SPI ADR 1 L
FCTP PRN INC 1 L
AS2
74S153 E15
FCTP SP2 INC Ø L
IDPN SPI ADR Ø L
FCTP PRN INC Ø L
AJ2
BE2
FCTP RA ADRS 1 L (FCTM, FNMT, U)
BF2
FCTP RA ADRS Ø L (FCTM, FNMT, U)
DAPL ACC RA ADRS 1 H
CD1
74S04 E59
DAPL ACC RA ADRS Ø H
CE1
IDPN SP2 ADR 3 L
AM1
74S153 E3
IDPN SP2 ADR 2 L
API
BJ1
BK1
FCTP RB ADRS 3 L (FCTM, FNMT, U)
FCTP RB ADRS 2 L (FCTM, FNMT, U)
FCTP PRN INC 1 L
IDPN SP2 ADR 1 L
FCTP PRN 1 L
AS1
74S153 E5
FCTP PRN INC Ø L
IDPN SP2 ADR Ø L
FCTP PRN Ø L
AJ1
BJ2
FCTP RB ADRS 1 L (FCTM, FNMT, U)
BK2
FCTP RB ADRS Ø L (FCTM, FNMT, U)
DAPL ACC RA ADRS 2 H
CB1
DAPL ACC RA ADRS 3 H
CC1
FCTL SRC 1 H
FCTL SRC Ø H
74SØØ E31
FCTP ADRS SI H (FCTP)
FCTP ADRS SØ H (FCTP)
FCTA +3V H
74S74 E7Ø
FCTM CPTØ A H
FCTM CPT1ØØ L
DAPL ACC RA CONTEXT Ø H
DAPL ACC RA CONTEXT 1 H
CU1
CS1
74SØ8 E22
74SØØ E116
CU2
FCTP WRITE BYTE L (FNMT)
DA1
FCTP WRITE LONG L (FNMU)
CP1
FCTP WRITE WORD L (FNMT)

CS

1	Ø	RA	RB	USE
Ø	Ø	CPU	CPU	
Ø	1	SP2+1	PRN+1	DP R,R (2ND 1/2)
1	Ø	SPI	SP2	R,R, S#, R
1	1	PRN+1	PRN	DP M,R

(REGISTER ADDRESSES) (SLOT 28)

REVISIONS		
CHK	CHANGE NO.	REV.

TITLE	SIZE	CODE	NUMBER	REV.
FPA CONTROLLER (FCTP)	D	CS	M8289-Ø-1	C
SCALE —H— SHEET 14 OF 16	DIST.			

TW

"THIS DRAWING AND SPECIFICATIONS, HEREIN, ARE THE PROPERTY OF DIGITAL EQUIPMENT CORPORATION AND SHALL NOT BE REPRODUCED OR COPIED OR USED IN WHOLE OR IN PART AS THE BASIS FOR THE MANUFACTURE OR SALE OF ITEMS WITHOUT WRITTEN PERMISSION.
COPYRIGHT © 1977 DIGITAL EQUIPMENT CORPORATION"

FAD CONTROL PROM DECODE (23Ø3GB1-ØØ)

PROM ADDR	FAD CTL	PROM DATA D7	D6	D5	D4	D3	D2	D1	DØ	EN SFC	LOAD BRI	LOAD BRØ	LOAD ARI	LOAD ARØ	LOAD ARX
ØØ	ØØ	V	X	H	L	L	H	H	H						
Ø1	Ø1	X	X	H	H	L	L	L	L						
Ø2	Ø2	X	X	H	L	L	H	L	L						
Ø3	Ø3	X	X	H	H	L	H	L	L						
Ø4	Ø4	X	X	H	H	H	L	L	L						
Ø5	Ø5	X	X	H	L	H	L	L	L						
Ø6	Ø6	X	X	H	L	L	L	H	L						
Ø7	Ø7	X	X	H	L	H	L	H	L						
Ø8	Ø8	X	X	H	H	H	H	H	H						
Ø9	Ø9	X	X	L	L	L	L	L	L						
ØA	ØA	X	X	L	L	L	H	H	H						
ØB	ØB	X	X	L	L	L	L	L	L						
ØC	ØC	X	X	H	L	L	L	L	L						
ØD	ØD	X	X	H	L	L	L	L	L						
ØE	ØE	X	X	L	L	L	L	L	L						
ØF	ØF	X	X	L	L	L	L	L	L						
1Ø	ØØ	X	X	H	L	L	H	H	H						
11	Ø1	X	X	H	H	L	L	L	L						
12	Ø2	X	X	H	L	L	H	L	L						
13	Ø3	X	X	H	H	L	H	L	L						
14	Ø4	X	X	H	H	H	L	L	L						
15	Ø5	X	X	H	L	H	L	L	L						
16	Ø6	X	X	H	L	L	L	H	L						
17	Ø7	X	X	H	L	H	L	H	L						
18	Ø8	X	X	H	H	H	H	H	H						
19	Ø9	X	X	L	L	L	L	L	L						
1A	ØA	X	X	L	H	H	L	L	L						
1B	ØB	X	X	L	L	L	L	L	L						
1C	ØC	X	X	H	L	L	L	L	L						
1D	ØD	X	X	H	L	L	L	L	L						
1E	ØE	X	X	L	L	L	L	L	L						
1F	ØF	X	X	L	L	L	L	L	L						

PROM ADDR	FAD CTL	PROM DATA D7	D6	D5	D4	D3	D2	D1	DØ	EN SFC	LOAD BRI	LOAD BRØ	LOAD ARI	LOAD ARØ	LOAD ARX
2Ø	ØØ	X	X	H	L	L	H	H	H						
21	Ø1	X	X	H	H	L	L	L	L						
22	Ø2	X	X	H	L	L	H	L	L						
23	Ø3	X	X	H	H	L	H	L	L						
24	Ø4	X	X	H	H	H	L	L	L						
25	Ø5	X	X	H	L	H	L	L	L						
26	Ø6	X	X	H	L	L	L	H	L						
27	Ø7	X	X	H	L	H	L	H	L						
28	ØB	X	X	H	H	H	H	H	H						
29	Ø9	X	X	L	L	L	L	L	L						
2A	ØA	X	X	H	L	L	L	L	L						
2B	ØB	X	X	L	L	L	L	L	L						
2C	ØC	X	X	H	L	L	L	L	L						
2D	ØD	X	X	H	L	L	L	L	L						
2E	ØE	X	X	L	L	L	L	L	L						
2F	ØF	X	X	L	L	L	L	L	L						
3Ø	ØØ	X	X	H	L	L	H	H	H						
31	Ø1	X	X	H	H	L	L	L	L						
32	Ø2	X	X	H	L	L	H	L	L						
33	Ø3	X	X	H	H	L	H	L	L						
34	Ø4	X	X	H	H	H	L	L	L						
35	Ø5	X	X	H	L	H	L	L	L						
36	Ø6	X	X	H	L	L	L	H	L						
37	Ø7	X	X	H	L	H	L	H	L						
38	ØB	X	X	H	H	H	H	H	H						
39	Ø9	X	X	L	L	L	L	L	L						
3A	ØA	X	X	H	L	L	L	L	L						
3B	ØB	X	X	L	L	L	L	L	L						
3C	ØC	X	X	H	L	L	L	L	L						
3D	ØD	X	X	H	L	L	L	L	L						
3E	ØE	X	X	L	L	L	L	L	L						
3F	ØF	X	X	L	L	L	L	L	L						

FAD PROM DECODE TRUTH TABLE (SLOT 28)

REVISIONS

CHK	CHANGE NO	REV.

TITLE	SIZE	CODE	NUMBER	REV.
FPA CONTROLLER (FCT)	D	CS	M8289 -Ø -1	C
SCALE	SHEET 15 OF 16	DIST.		

DOC FORM NO. 888 130

TW

"THIS DRAWING AND SPECIFICATIONS, HEREIN, ARE THE PROPERTY OF DIGITAL EQUIPMENT CORPORATION AND SHALL NOT BE REPRODUCED OR COPIED OR USED IN WHOLE OR IN PART AS THE BASIS FOR THE MANUFACTURE OR SALE OF ITEMS WITHOUT WRITTEN PERMISSION.
COPYRIGHT © 1972 DIGITAL EQUIPMENT CORPORATION"

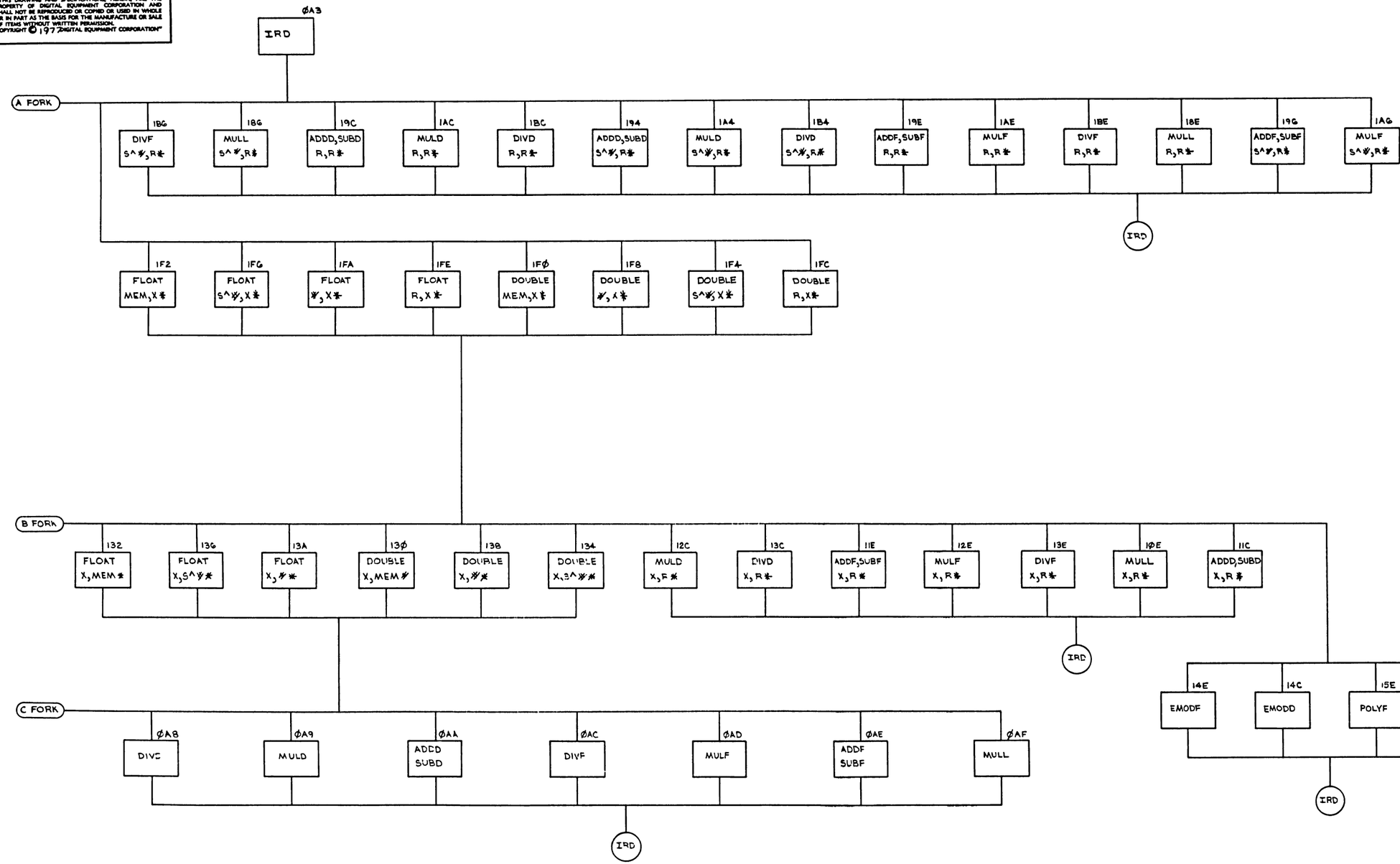

REVISIONS		
CHK	CHANGE NO.	REV.

FPA FORK ENTRY POINTS

TITLE	SIZE	CODE	NUMBER	REV.
FPA CONTROLLER (FCT)	D	CS	M8289-Ø-1	C
SCALE	SHEET 16 OF 16	DIST.		

BLANK